EUROPEAN STANDARD

NORME EUROPÉENNE

EUROPÄISCHE NORM

DRAFT
prEN 1991-1-3

March 2023

ICS 91.010.30

Will supersede EN 1991-1-3:2003

English Version

Eurocode 1 - Actions on structures - Part 1-3: Snow loads

Eurocode 1 - Actions sur les structures - Partie 1-3 : Charges de neige

Eurocode 1 - Einwirkungen auf Tragwerke - Teil 1-3: Allgemeine Einwirkungen - Schneelasten

This draft European Standard is submitted to CEN members for enquiry. It has been drawn up by the Technical Committee CEN/TC 250.

If this draft becomes a European Standard, CEN members are bound to comply with the CEN/CENELEC Internal Regulations which stipulate the conditions for giving this European Standard the status of a national standard without any alteration.

This draft European Standard was established by CEN in three official versions (English, French, German). A version in any other language made by translation under the responsibility of a CEN member into its own language and notified to the CEN-CENELEC Management Centre has the same status as the official versions.

CEN members are the national standards bodies of Austria, Belgium, Bulgaria, Croatia, Cyprus, Czech Republic, Denmark, Estonia, Finland, France, Germany, Greece, Hungary, Iceland, Ireland, Italy, Latvia, Lithuania, Luxembourg, Malta, Netherlands, Norway, Poland, Portugal, Republic of North Macedonia, Romania, Serbia, Slovakia, Slovenia, Spain, Sweden, Switzerland, Türkiye and United Kingdom.

Recipients of this draft are invited to submit, with their comments, notification of any relevant patent rights of which they are aware and to provide supporting documentation.

Warning : This document is not a European Standard. It is distributed for review and comments. It is subject to change without notice and shall not be referred to as a European Standard.

EUROPEAN COMMITTEE FOR STANDARDIZATION
COMITÉ EUROPÉEN DE NORMALISATION
EUROPÄISCHES KOMITEE FÜR NORMUNG

CEN-CENELEC Management Centre: Rue de la Science 23, B-1040 Brussels

Ref. No. prEN 1991-1-3:2023 E

Contents

Page

European foreword

This document (prEN 1991-1-3:2023) has been prepared by Technical Committee CEN/TC 250 “Structural Eurocodes”, the secretariat of which is held by BSI.

CEN/TC 250 is responsible for all Structural Eurocodes and has been assigned responsibility for structural and geotechnical design matters by CEN.

This document is currently submitted to the CEN Enquiry.

This document will supersede EN 1991-1-3:2003.

The first generation of EN Eurocodes was published between 2002 and 2007. This document forms part of the second generation of the Eurocodes, which have been prepared under Mandate M/515 issued to CEN by the European Commission and the European Free Trade Association.

The Eurocodes have been drafted to be used in conjunction with relevant execution, material, product and test standards, and to identify requirements for execution, materials, products and testing that are relied upon by the Eurocodes.

The Eurocodes recognize the responsibility of each Member State and have safeguarded their right to determine values related to regulatory safety matters at national level through the use of National Annexes.

Introduction

0.1 Introduction to the Eurocodes

The structural Eurocodes comprise the following standards generally consisting of a number of Parts:

— EN 1990, *Eurocode: Basis of structural and geotechnical design*

— EN 1991, *Eurocode 1: Actions on structures*

— EN 1992, *Eurocode 2: Design of concrete structures*

— EN 1993, *Eurocode 3: Design of steel structures*

— EN 1994, *Eurocode 4: Design of composite steel and concrete structure*

— EN 1995, *Eurocode 5: Design of timber structures*

— EN 1996, *Eurocode 6: Design of masonry structures*

— EN 1997, *Eurocode 7: Geotechnical design*

— EN 1998, *Eurocode 8: Design of structures for earthquake resistance*

— EN 1999, *Eurocode 9: Design of aluminium structures*

— New parts are under development, e.g. Eurocode for design of structural glass

The Eurocodes are intended for use by designers, clients, manufacturers, constructors, relevant authorities (in exercising their duties in accordance with national or international regulations), educators, software developers, and committees drafting standards for related product, testing and execution standards.

NOTE Some aspects of design are most appropriately specified by relevant authorities or, where not specified, can be agreed on a project-specific basis between relevant parties such as designers and clients. The Eurocodes identify such aspects making explicit reference to relevant authorities and relevant parties.

0.2 Introduction to EN 1991

(1) EN 1991 provides the actions to be considered for the structural design of buildings, bridges and other civil engineering works, or parts thereof, including temporary structures, in conjunction with EN 1990 and the other Eurocodes.

(2) The actions on structures, including in some cases geotechnical structures in conjunction with EN 1997 as appropriate, provided in EN 1991 are intended to be applied in conjunction with the other Eurocodes for the verification of safety, serviceability and durability, as well as robustness of structures, including the execution phase.

(3) The application of this document for the verifications mentioned in (2) follows the limit state principle and is based on the partial factor method, unless explicitly prescribed differently.

(4) EN 1991 does not cover the specific requirements of actions for seismic design, unless explicitly stated in EN 1998. Provisions related to such requirements are given in EN 1998, which complements and is consistent with EN 1991.

(5) EN 1991 is also applicable in the case of existing structures for their:

— structural assessment,

— design of repairs, improvements and alterations,

— assessment for changes of use.

NOTE In this case additional or amended provisions can be necessary.

(6) EN 1991 is also applicable to the design of structures where materials or actions outside the scope of the other Eurocodes are involved.

NOTE In this case additional or amended provisions can be necessary.

0.3 Introduction to EN 1991-1-3

EN 1991-1-3 gives design guidance and actions from snow for the structural design of buildings and civil engineering works.

EN 1991-1-3 is addressed to all parties involved in construction activities (e.g. public authorities, clients, designers, contractors, producers, consultants, etc.).

0.4 Verbal forms used in the Eurocodes

The verb “shall” expresses a requirement strictly to be followed and from which no deviation is permitted in order to comply with the Eurocodes.

The verb “should” expresses a highly recommended choice or course of action. Subject to national regulation and/or any relevant contractual provisions, alternative approaches could be used/adopted where technically justified.

The verb “may” expresses a course of action permissible within the limits of the Eurocodes.

The verb “can” expresses possibility and capability; it is used for statements of fact and clarification of concepts.

0.5 National Annex for EN 1991-1-3

National choice is allowed in this standard where explicitly stated within notes. National choice includes the selection of values for Nationally Determined Parameters (NDPs).

The national standard implementing EN 1991-1-3 can have a National Annex containing all national choices to be used for the design of buildings and civil engineering works to be constructed in the relevant country.

When no national choice is given, the default choice given in this standard is to be used.

When no national choice is made and no default is given in this standard, the choice can be specified by a relevant authority or, where not specified, agreed for a specific project by appropriate parties.

National choice is allowed in EN 1991-1-3 through notes to the following clauses:

4.3 (1) NOTE	7.4 (2) NOTE 2	8.1 (1) NOTE 1
6.1 (1) NOTE 1	7.4 (4) NOTE 1	8.2 (2) NOTE
6.1 (1) NOTE 2	7.4 (5) NOTE 1	8.3 (1) NOTE
6.2 (1) NOTE	7.5.2 (3) NOTE	8.4 (1) NOTE
7.3 (2) Table 7.1	7.5.3 (3) Table 7.3	8.4 (3) NOTE 1
7.3 (2) NOTE 2	7.5.3 (4) NOTE	8.4 (3) NOTE 2

7.4 (1) NOTE	7.5.4 (2) NOTE 1	8.6 (1) NOTE 1
7.4 (2) NOTE 1	7.5.4 (2) NOTE 2	8.6 (1) NOTE 2

National choice is allowed in EN 1991-1-3 on the application of the following informative annexes:

Annex A	Annex B	Annex C

The National Annex can contain, directly or by reference, non-contradictory complementary information for ease of implementation, provided it does not alter any provisions of the Eurocodes.

1 Scope

1.1 Scope of EN 1991-1-3

(1) EN 1991-1-3 gives principles and rules to determine the values of loads due to snow to be used for the structural design of buildings and civil engineering works.

(2) This Part does not apply to sites at altitudes above 1500 m, unless otherwise specified.

NOTE For rules for the treatment of snow loads for altitudes above 1500 m see 6.1.

(3) This Part does not give guidance on specialist aspects of snow loading, for example:

— impact snow loads resulting from snow sliding off or falling from a higher roof;

— changes in shape or size of the construction works due to the presence of snow or the accretion of ice which could affect the wind action;

— loads in areas where snow is present all year round;

— lateral loading due to snow creep (e.g. lateral loads exerted by drifts);

— loads due to artificial snow.

1.2 Assumptions

The assumptions given in FprEN 1990:2022, 1.2 apply to EN 1991-1-3.

2 Normative references

The following documents are referred to in the text in such a way that some or all of their content constitutes requirements of this document. For dated references, only the edition cited applies. For undated references, the latest edition of the referenced document (including any amendments) applies.

NOTE See the Bibliography for a list of other documents cited that are not normative references, including those referenced as recommendations (i.e. in “should” clauses), permissions (“may” clauses), possibilities (“can” clauses), and in notes.

FprEN 1990:2022, *Eurocode — Basis of structural and geotechnical design*

3 Terms, definitions and symbols

3.1 Terms and definitions

For the purposes of this document, the terms and definitions given in FprEN 1990 and the following apply.

3.1.1
characteristic value of snow load on the ground
s_k
snow load on the ground at the relevant site, based on an annual probability of exceedance of 0,02, excluding exceptional snow loads

3.1.2
altitude of the site
A
height above mean sea level of the site where the structure is to be located, or is already located for an existing structure

3.1.3
exceptional snow load on the ground
s_{Ad}
load of the snow layer on the ground resulting from a snow fall which has an exceptionally infrequent likelihood of occurring

Note 1 to entry See note to 4.3 (1) for locations where this can occur

3.1.4
characteristic value of snow load on the roof
s
product of the characteristic snow load on the ground and the coefficients defined in 3.1.7 to 3.1.9

Note 1 to entry: In accordance with FprEN 1990:2022, 6.1.2.3 (2), the characteristic value of snow load on the roof corresponds to an upper value with an annual probability of exceedance of 0,02 or to a nominal value.

3.1.5
balanced snow load arrangement on the roof
load arrangement which describes the uniformly distributed snow load on the roof, affected by the shape of the roof and its exposure to wind

3.1.6
unbalanced snow load arrangement on the roof
load arrangement which describes the snow load distribution resulting from snow having been moved from one location to another location on a roof or off the roof, depending on the exposure of the roof to wind and the effects of sliding

Note 1 to entry: Unbalanced load arrangements given in this standard assume that wind can have any direction.

3.1.7
snow load shape coefficient
μ_i
ratio of the characteristic ground snow load on the roof to the snow load on the ground, including the effect of wind exposure but without the influence of thermal effects

3.1.8
thermal coefficient
C_t
coefficient defining the change of snow load on roofs as a function of the heat flux through the roof

3.1.9
exposure coefficient
C_e
coefficient defining the reduction or increase of snow load on a roof of an unheated building due to the roof exposure to wind, as a fraction of the characteristic snow load on the ground

3.1.10
flat roof
roof with pitch angles between 0 and 5 degrees, $0° \leq \alpha \leq 5°$

3.2 Symbols and abbreviations

For the purposes of this European Standard, the following symbols, specific to this Part, apply, together with the general notations given in FprEN 1990:2022, Clause 3.

NOTE The notation used is based on ISO 3898:2013.

3.2.1 Latin upper-case letters

C_e exposure coefficient

C_t thermal coefficient

C_{esl} coefficient for exceptional snow loads

$C_{e,F}$ exposure coefficient for flat roof

A altitude of the site

F_s force per unit length exerted by a sliding mass of snow

L length of the longer side of the flat roof

L_c effective roof length

W length of the shorter side of the flat roof

3.2.2 Latin lower case letters

b width of construction work or lateral distance of tilted panels on flat roofs

d depth of the snow layer

h reference height for the calculation of the snow load shape coefficient

h_p height of the parapet

k coefficient to take account of the irregular shape of snow

l_s length of snow drift or snow loaded area

s characteristic snow load on the roof

s_k characteristic value of snow on the ground at the relevant site

s_{Ad} design value of exceptional snow load on the ground at the relevant site

s_e snow load per unit length due to the overhang

s_R rain-on-snow surcharge

w width of the obstruction/parapet

3.2.3 Greek lower-case letters

α	angle of pitch of roof
α_{inter}	intersection angle
β	angle between the horizontal and the tangent to the curve for a cylindrical roof
γ	snow weight density
δ	snow drift factor
μ_1	snow load shape coefficient for flat roofs
μ_2	snow load shape coefficient for mono-pitched and pitched roofs
$\mu_{2,b}$	basic snow load shape coefficient for pitched roofs
$\mu_{2,p}$	lower limit for the snow load shape coefficient for the roof pitch with a retention device at the lower edge
$\mu_{2,w}$	snow load shape coefficient taking into account the wind driven part of the snow on pitched roofs
μ_3	snow load shape coefficient for multi-span roofs
μ_{3max}	maximum value of the snow load shape coefficient for multi-span roofs
μ_4	snow load shape coefficient for cylindrical roofs and domes
μ_5	snow load shape coefficient for roof abutting to taller construction works
μ_6	snow load shape coefficient for local drifting at obstructions
μ_7	snow load shape coefficient for local drifting at parapets
μ_8	snow load shape coefficient for local drifting at intersecting pitched roofs
μ_{8max}	maximum value of the snow load shape coefficient for local drifting at intersecting pitched roofs
μ_p	upper limit for the snow load shape coefficient for flat roofs with tilted panels
μ_L	pertinent snow load shape coefficient for the lower roof (roof abutting to taller construction works)
μ_U	pertinent snow load shape coefficient for the upper roof (roof abutting to taller construction works)
μ_s	snow load shape coefficient taking into account the sliding part from the upper roof (roof abutting to taller construction works)
μ_w	snow load shape coefficient taking into account the wind driven part of the drift, originating from erosion of the snow cover on both the upper and lower roofs (roof abutting to taller construction works)

4 Design situations

4.1 General

(1) The snow loads shall be determined for each relevant design situation identified in accordance with FprEN 1990:2022, 5.2.

(2) Further to the fundamental (persistent and transient) design situation (see 4.2 and 4.3), accidental design situation should be considered where exceptional conditions apply (see 4.3).

4.2 Normal conditions

(1) For locations where exceptional snow falls (see 5.1 (3)) are unlikely to occur, the fundamental (persistent and transient) design situation should be used for both the balanced and the unbalanced snow load arrangements determined as specified in 7.1.

(2) For local effects (see Clause 8), the fundamental (persistent and transient) design situation should be used.

4.3 Exceptional conditions

(1) For locations where exceptional snow loads on the ground (see 5.1 (3)) are likely to occur the following apply:

a) the fundamental (persistent and transient) design situation should be used for both the balanced and the unbalanced snow load arrangements determined as specified in 7.1, and

b) the accidental design situation should be used for both the balanced and the unbalanced snow load arrangements determined as specified in 6.2 and 7.1.

NOTE Exceptional conditions (which can include geographical locations) can be defined in the National Annex for use in a country.

(2) For local effects a relevant design situation should be used.

NOTE For specification of design situations applicable to local effects see Clause 8.

5 Modelling of snow load

5.1 Classification of actions

(1) Snow loads shall be classified as variable, fixed actions, unless otherwise specified in this standard.

NOTE See FprEN 1990:2022, 6.1.1 (4).

(2) Snow loads covered in this standard should be classified as static actions.

NOTE See FprEN 1990:2022, 6.1.1 (4).

(3) In exceptional conditions (see 4.3), exceptional snow loads on the ground may be treated as accidental actions instead of variable actions depending on geographical locations.

5.2 Design assisted by testing

(1) For roof shapes not covered or for project specific circumstances, scale model studies in wind tunnels or water flumes and/or methods of computational fluid dynamics may be used to determine snow loads on construction works.

NOTE See also FprEN 1990:2022, 7.3 (3) for achievement of the level of reliability required.

(2) The specific circumstances should be as specified by the relevant authority or agreed for a specific project by the relevant parties.

(3) All prediction models should be calibrated against field data, taking into account simplifications and assumptions about snow accumulation processes.

NOTE See also FprEN 1990:2022, Annex D and ISO 4355:2013, Annex G.

6 Snow load on the ground

6.1 Characteristic values

(1) The characteristic value of snow load on the ground (s_k) should be determined in accordance with FprEN 1990:2022, 6.1.2.3 (2) and the definition for characteristic snow load on the ground given in 3.1.1.

NOTE 1 Characteristic values of ground snow load at sites for altitudes up to 1500 m can be set by the National Annex for use in a country.

NOTE 2 Rules for the treatment of snow loads for altitudes above 1500 m can be set by the National Annex.

NOTE 3 For ground snow load values associated to different return periods, see Annex B.

(2) As an alternative to (1), the characteristic value of snow load on the ground (s_k) may be defined by means of an appropriate statistical analysis of available measurements, when specified by the relevant authority or, where not specified, agreed for a specific project by the relevant parties.

NOTE Further guidance on determination of characteristic ground snow loads can be found in Annex A.

6.2 Treatment of exceptional snow loads on the ground

(1) For locations where exceptional snow loads on the ground are likely to occur (see 4.3), they should be determined by:

$$s_{Ad} = C_{esl}\ s_k \tag{6.1}$$

where

s_{Ad} is the design value of exceptional snow load on the ground for the given location;

C_{esl} is the coefficient for exceptional snow loads;

s_k is the characteristic value of snow load on the ground for a given location (see 3.1.1).

NOTE The value of C_{esl} is 2,0 unless the National Annex gives a different value for use in a country.

7 Snow load on roofs

7.1 Load arrangements

(1) The following load arrangements should be taken into account separately:

— balanced snow load on roofs (see 3.1.5);

— unbalanced snow load on roofs (see 3.1.6).

NOTE Properties of a roof or other factors causing different deposition patterns can include:

— the shape of the roof;

— its thermal properties;

— the roughness of its surface;

— the amount of heat generated under the roof;

— the proximity of nearby buildings;

— the surrounding terrain;

— the local meteorological climate, in particular its windiness, temperature variations, exposure to solar radiation, and likelihood of precipitation (either as rain or as snow).

(2) Snow loads on roofs should be assumed to act vertically and refer to a horizontal projection of the roof area.

(3) When artificial removal or redistribution of snow on a roof is anticipated, the structure of the roof should be designed for suitable load arrangements, including non-symmetrical loading.

NOTE The load arrangements according to this Section have been derived for natural deposition patterns only. Load arrangements due to the artificial removal can lead to more unfavourable load effects in comparison to the balanced and unbalanced load arrangements provided in Clause 7.

7.2 Determination of snow load

(1) Snow loads on roofs shall be determined:

a) for the fundamental (persistent and transient) design situations by using Formula (7.1) (normal conditions, see 4.2):

$$s = \mu_i \, C_t \, s_k \tag{7.1}$$

b) for the accidental design situations by using Formula (7.2) (exceptional conditions, see 4.3):

$$s = \mu_i \, C_t \, s_{Ad} \tag{7.2}$$

where, further to the symbols defined in 6:

μ_i is the snow load shape coefficient (see 7.5), function of the wind exposure of the site (through the exposure coefficient C_e – see 7.3) and of the geometry of the roof;

C_t is the thermal coefficient (see 7.4).

NOTE Where the snow load shape coefficients in 7.5 depend on s_k, the values of snow load shape coefficients for exceptional snow loads can be estimated by replacing s_k by s_{Ad}.

(2) Special consideration should be taken in cases where snow can be redistributed from the ground to the roof.

NOTE This can be the case in wind exposed areas for low-rise buildings.

7.3 Exposure coefficient

(1) The exposure coefficient C_e should be determined taking into account the snow redistribution by wind.

NOTE In general snow redistribution depends on several effects, such as snow physical properties, amount of available snow and wind exposure conditions.

(2) The exposure coefficient C_e may be determined considering the wind exposure conditions of the roof.

NOTE 1 The wind exposure conditions, and the corresponding values of C_e are given in Table 7.1 unless the National Annex gives different wind exposure conditions and/or values for use in a country.

Table 7.1 — (NDP) Values of C_e for different wind exposure conditions

Wind exposure conditions	C_e
Windswept[a]	0,8
Normal[b]	1,0
Sheltered[c]	1,2

[a] *Windswept*: flat unobstructed areas exposed on all sides without, or little shelter afforded by terrain, higher construction works or trees, e.g. as terrain category 0, 1 and 2 defined in prEN 1991-1-4:202X, Annex B. The wind velocity (at the height of 10 m above flat open country terrain, 10-min mean basis) in windswept sites averaged over the coldest month of the year is assumed to be higher than 4,5 m/s. For lower mean wind speed *Normal* conditions apply.

[b] *Normal:* areas where there is no significant removal of snow by wind on construction work, because of terrain, other construction works or trees, e.g. as terrain category 3 defined in prEN 1991-1-4:202X, Annex B.

[c] *Sheltered:* areas in which the construction work being considered is considerably lower than the surrounding terrain or surrounded by high trees and/or surrounded by higher construction works, e.g. as terrain category 4 defined in prEN 1991-1-4:202X, Annex B.

NOTE 2 For windswept conditions the National Annex can set a different value of the mean wind velocity during the coldest month of the year and specify locations where the mean wind velocity during the coldest month of the year is above that value.

NOTE 3 In the case of significant uncertainties about the future development of wind exposure conditions, a safe-sided choice of C_e is appropriate.

7.4 Thermal coefficient

(1) The thermal coefficient C_t should be specified.

NOTE For cases other than those described in (2) and (3), the value of C_t is 1,0, unless the National Annex gives a different value for use in a country.

(2) For locations where the heat transfer through the roof and the duration of the snow load is long enough to melt significant parts of the snow cover, the thermal coefficient C_t may be reduced for roofs with high thermal transmittance (>1 W/m²K, e.g. greenhouses and some glass covered roofs), due to melting caused by heat transfer.

NOTE 1 Locations where the duration of the snow load is long enough can be selected on the basis of the characteristic ground snow load greater than a threshold value $s_{k,min}$. $s_{k,min}$ is 1,5 kN/m² unless the National Annex gives a different value for use in a country.

NOTE 2 Based on the thermal insulating properties of the roof and the geometry of the construction work, a reduced C_t value below 1,0 can be given in the National Annex for use in a Country.

(3) An adequate meltwater draining system should be arranged where C_t is reduced below 1,0.

(4) For buildings where the internal temperature is intentionally kept below 0 °C (e.g. freezer buildings, ice skating arenas), C_t should be increased above 1,0, unless the thermal insulation prevents increases in the roof snow load.

NOTE 1 For such buildings the value of C_t is 1,2 unless the National Annex gives a different value for use in the country.

NOTE 2 The increase of roof snow load is mainly due to condensation and refreezing of water vapour from the atmosphere into the snow layer.

(5) For locations where $s_k \leq 1$ kN/m² a load surcharge s_R may be applied to the balanced snow load arrangement on flat roofs (see 3.1.10) in the fundamental (persistent and transient) design situation, accounting for rain-on-snow.

NOTE 1 The rain-on-snow surcharge s_R is 0,25 kN/m² for $s_k \leq 0{,}75$ kN/m² and (1,0 kN/m²- s_k) for $0{,}75 < s_k \leq 1{,}0$ kN/m² unless the National Annex gives different values for use in a country.

NOTE 2 The rain-on-snow surcharge can be applied in areas where characteristic ground snow loads are based on snow depth measurements.

7.5 Snow load shape coefficients

7.5.1 Field of application

(1) The snow load shape coefficients provided in this standard should only be applied to rigid structures, deformations of which do not affect the roof snow load. Special consideration should be given to flexible structures such as fabric or inflated structures, deformations of which can cause snow redistribution.

(2) Special consideration should be given to the snow load shape coefficients to be used where the roof has an external geometry which can lead to increases in snow load, that are considered significant in comparison with that of a roof with linear profile.

7.5.2 Flat roofs

(1) For flat roofs only, the balanced load arrangement should be used.

(2) The snow load shape coefficient that should be used for flat roofs is given by Formula (7.3).

$$\mu_1 = 0{,}8\, C_{\mathrm{e,F}} \tag{7.3}$$

The exposure coefficient for flat roofs $C_{\mathrm{e,F}}$ is given by Formula (7.4)

$$C_{\mathrm{e,F}} = \begin{cases} C_{\mathrm{e}} \ \text{ for } L_{\mathrm{c}} \leq 50\,\mathrm{m} \\ C_{\mathrm{e}} + \left(1{,}25 - C_{\mathrm{e}}\right)\dfrac{\left(L_{\mathrm{c}} - 50\,\mathrm{m}\right)}{350\,\mathrm{m}} \ \text{ for } 50\,\mathrm{m} < L_{\mathrm{c}} < 400\,\mathrm{m} \\ 1{,}25 \ \text{ for } L_{\mathrm{c}} \geq 400\,\mathrm{m} \end{cases} \tag{7.4}$$

is the exposure coefficient for flat roofs, illustrated in Figure 7.1;

where

L_{c} is the effective roof length (in m) equal to $2W - W^2 / L$;

W is the length (in m) of the shorter side of the roof;

L is the length (in m) of the longer side of the roof.

NOTE For non-rectangular roofs, W and L can be taken as the shorter and longer side of the major roof dimensions along two orthogonal axes. For example, for an elliptical shape, W is measured along the short axis and L along the long axis.

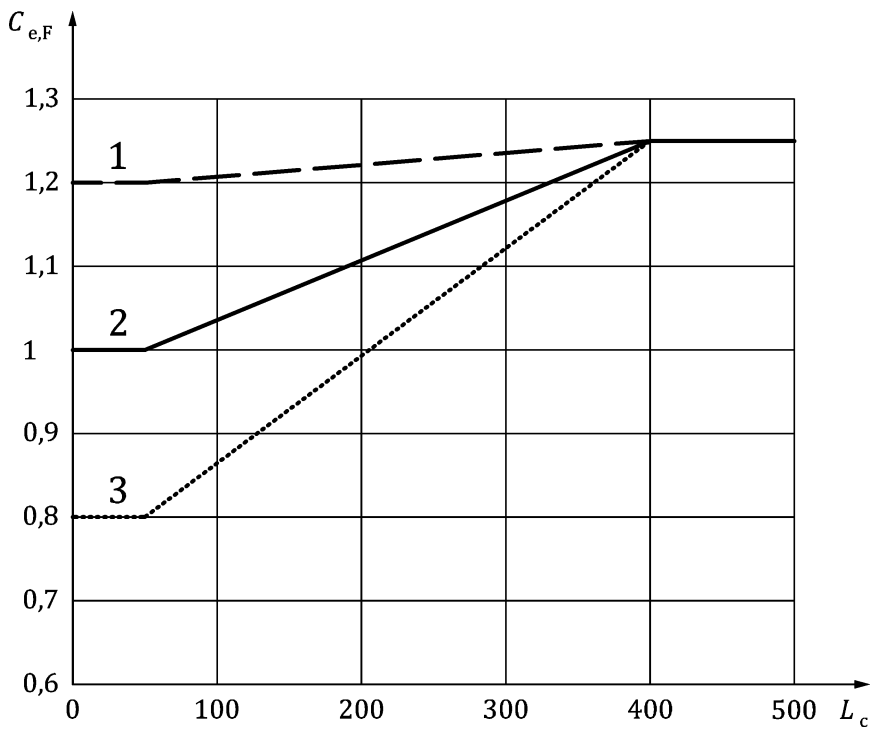

Key

1 $C_e = 1{,}2$

2 $C_e = 1$

3 $C_e = 0{,}8$

Figure 7.1 — Exposure coefficient for flat roofs

NOTE Figure 7.1 is drawn on the basis of values for C_e given in Table 7.1.

(3) For flat roofs with parallel rows of tilted panels the unbalanced load arrangement should be used according to Figure 7.2, μ_p being given by Formula (7.5):

$$\mu_p = \frac{\gamma h}{s_k} \text{ with } \mu_1 \leq \mu_p \leq 1 \tag{7.5}$$

where

μ_1 is the snow load shape coefficient defined in 7.5.2 (2);

h is the panel height, as shown in Figure 7.2;

γ is the snow weight density, which should be specified.

The length of snow drift should be determined as indicated in Formula (7.6).

$$l_s = 4h / C_e \tag{7.6}$$

NOTE γ is taken as 2 kN/m³ unless the National Annex gives a different value for use in a country.

(4) The local effects of the front row and end row of tilted panels should be treated according to 8.2 where $w < 2h$ and according to 8.3 where $w \geq 2h$ (see Figure 7.2 for the definition of w).

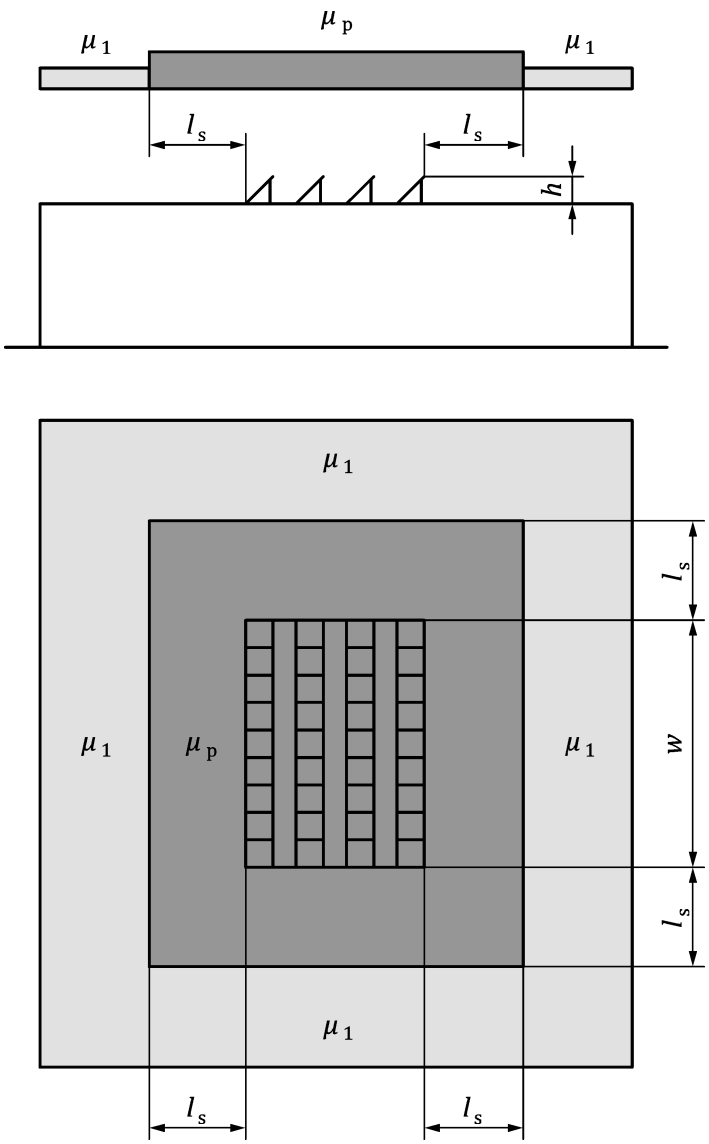

Figure 7.2 — Snow load arrangement for flat roofs with tilted panels

7.5.3 Pitched roofs

(1) The balanced load arrangement which should be used is shown in Figure 7.3, case (i).

(2) The unbalanced load arrangements which should be used are shown in Figure 7.3, cases (ii) and (iii).

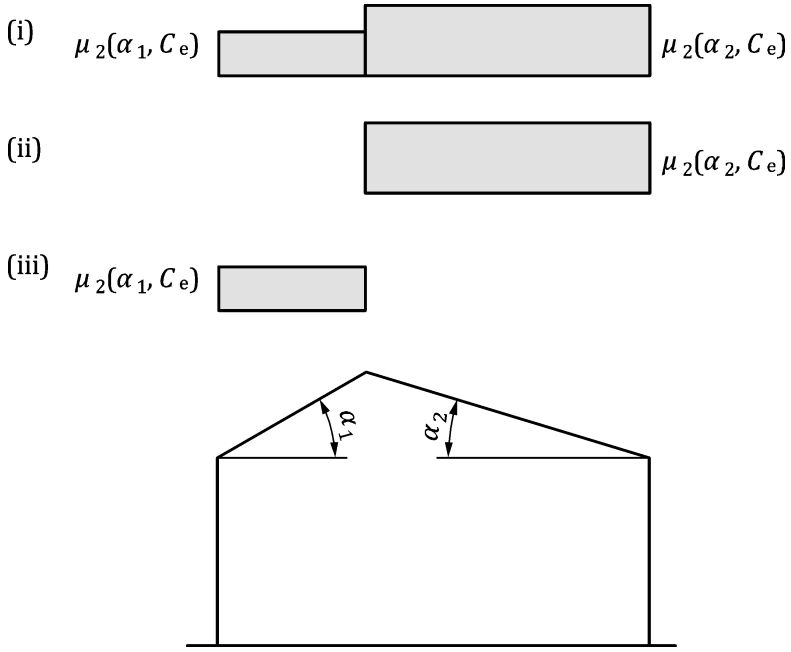

Key

(i) Balanced load arrangement

(ii) Unbalanced load arrangement

(iii) Unbalanced load arrangement

Figure 7.3 — Snow load arrangements for pitched roof

(3) The snow load shape coefficients that should be used for pitched roofs (i.e. with $\alpha > 5°$) are given in Formula (7.7) and illustrated in Figure 7.4.

$$\mu_2(\alpha, C_e) = \begin{cases} \mu_{2,b}(\alpha, C_e) & \text{for case (i)} \\ \mu_{2,b}(\alpha, C_e) + \mu_{2,w}(\alpha, C_e) & \text{for cases (ii) and (iii)} \end{cases} \tag{7.7}$$

where

$\mu_{2,b}(\alpha, C_e)$ is the basic load coefficient defined in Table 7.2.

Table 7.2 — Basic snow load shape coefficients for pitched roofs

Angle of pitch of roof α (°)	$5° < \alpha \leq 30°$	$30° < \alpha \leq 70°$	$\alpha > 70°$
$\mu_{2,b}(\alpha, C_e)$	$0{,}8C_e$	$0{,}8C_e\left(\frac{70° - \alpha}{40°}\right)$	0

$\mu_{2,w}(\alpha, C_e)$ is the snow load shape coefficient taking into account the wind driven part of the snow, defined in Table 7.3.

Table 7.3 — Snow load shape coefficients taking into account the wind driven part of the snow

Angle of pitch of roof α (°)	$5° < \alpha \leq 30°$	$30° < \alpha \leq 70°$	$\alpha > 70°$
$\mu_{2,\mathrm{w}}\left(\alpha, C_{\mathrm{e}}\right)$	$\delta\left(6-5C_{\mathrm{e}}\right)\dfrac{\left(\alpha-5°\right)}{25°}$	$\delta\left(6-5C_{\mathrm{e}}\right)\left(\dfrac{70°-\alpha}{40°}\right)$	0

NOTE δ is taken equal to $0{,}16$ unless the National Annex gives a different value for use in a country.

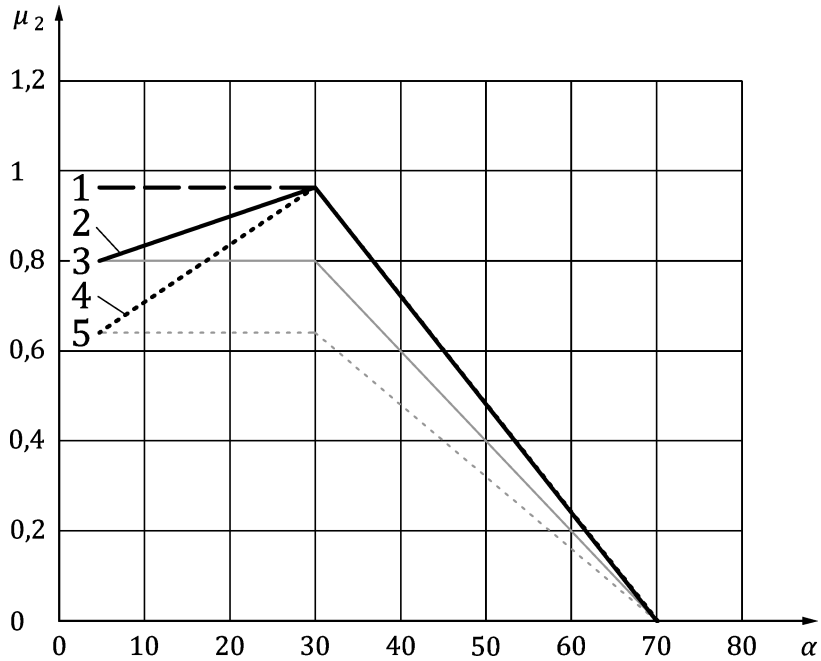

Key

1 μ_2 (C_e = 1,2) = $\mu_{2,\mathrm{b}}$ (C_e = 1,2)

2 μ_2 (C_e = 1,0)

3 $\mu_{2,\mathrm{b}}$ (C_e = 1,0)

4 μ_2 (C_e = 0,8)

5 $\mu_{2,\mathrm{b}}$ (C_e = 0,8)

NOTE Figure 7.4 is drawn on the basis of values for C_e given in Table 7.1.

Figure 7.4 — Snow load shape coefficient for pitched roofs

(4) The values given in Tables 7.2 and 7.3 apply when snow is not prevented from sliding off the roof. For the roof pitch with a retention device such as snow fences or a parapet at the lower edge, the snow load shape coefficient should not be reduced below $\mu_{2,\mathrm{p}}$.

NOTE $\mu_{2,\mathrm{p}}$ is $0{,}8\gamma\, h_{\mathrm{p}} / (C_{\mathrm{t}}\, C_{\mathrm{e}}\, s_{\mathrm{k}})$ where γ and h_{p} are defined in 8.3 (1), unless the National Annex gives a different value for use in a country.

(5) For mono-pitched roofs only the balanced load arrangement should be used, as illustrated in Figure 7.5, the snow load shape coefficient $\mu_2\left(\alpha, C_e\right)$ being given by Formula (7.7) for case (i).

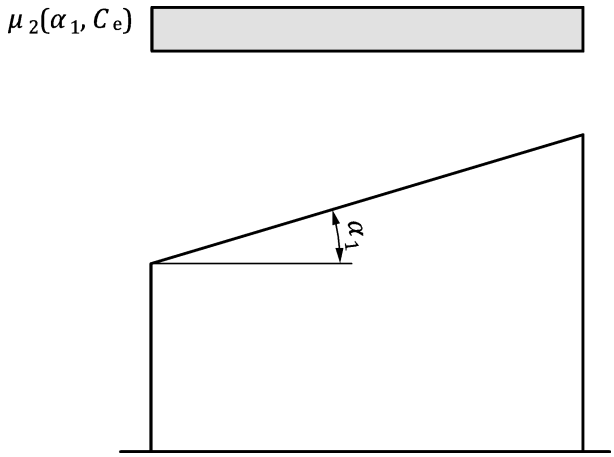

Figure 7.5 — Snow load arrangement for mono-pitched roof

7.5.4 Multi-span roofs

(1) The balanced load arrangement that should be used for multi-span roofs is shown in Figure 7.6 case (i), the snow load shape coefficient $\mu_2\left(\alpha, C_e\right)$ being given by Formula (7.7) for case (i).

(2) The unbalanced load arrangement which should be used for multi-span roofs without retention devices is shown in Figure 7.6, case (ii); the snow load shape coefficient $\mu_2\left(\alpha, C_e\right)$ being given by case (i) in Formula (7.7) and μ_3 being given by Formula (7.8):

$$\mu_3 = 0,9 + 0,7\frac{\alpha}{30} \text{ with } \mu_3 \leq \frac{\gamma h}{C_e s_k} \leq \mu_{3\max} \tag{7.8}$$

where

h is the height of the valley, as shown in Figure 7.6;

γ is the snow weight density, which should be specified;

α is $(\alpha_1 + \alpha_2)/2$.

NOTE 1 For the present calculation γ is taken as 2 kN/m³ unless the National Annex gives a different value for use in a country.

NOTE 2 $\mu_{3\max}$ is taken as 1,6 unless the National Annex gives a different value for use in a country.

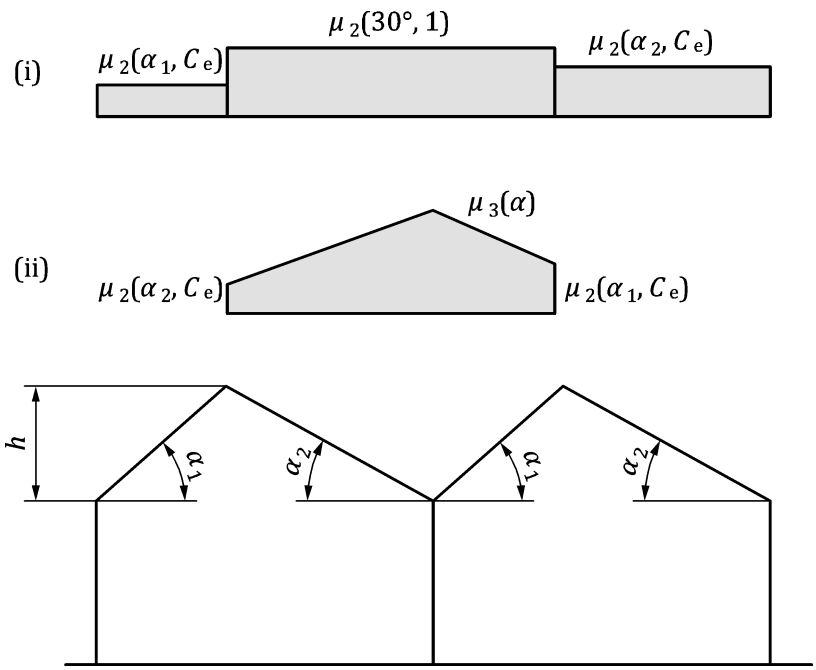

Key

(i) Balanced load arrangement

(ii) Unbalanced load arrangement

Figure 7.6 — Snow load arrangements for multi-span roofs

(3) The values of snow load shape coefficients given in 7.5.4 (2) for the outer pitches apply when snow is not prevented from sliding off the roof. For the outer pitches with a retention device, 7.5.3 (4) should be applied.

7.5.5 Cylindrical roofs

(1) The balanced load arrangement that should be used for cylindrical roofs is given in Figure 7.8 case (i), together with the value of the snow load shape coefficient to be applied.

(2) The unbalanced load arrangement that should be used for cylindrical roofs is given in Figure 7.8 case (ii).

(3) The snow load shape coefficients that should be used for unbalanced load arrangements on cylindrical roofs with a convex leading curve ($h/b \geq 0{,}05$) are given in the following formula (see also Figure 7.7).

$$\mu_4 = \left(0{,}2 + 10\, h / b\right) / C_e \text{ with } \mu_4 \leq 2 / C_e \tag{7.9}$$

(4) For cylindrical roofs with $h/b < 0{,}05$ only the balanced load case, given in Figure 7.8 case (i), should be considered.

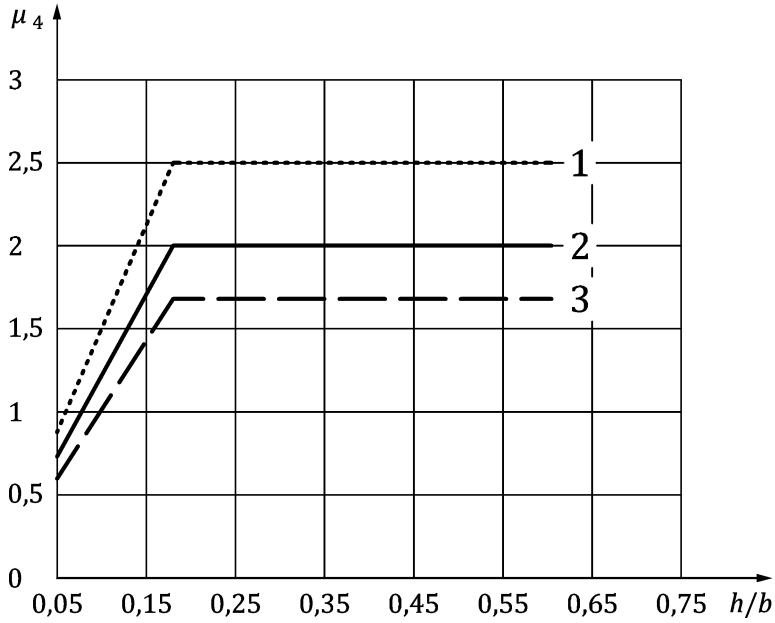

Key

1 (C_e = 0,8)

2 (C_e = 1,0)

3 (C_e = 1,2)

NOTE Figure 7.7 is drawn on the basis of the values for C_e given in Table 7.1.

Figure 7.7 — Snow load shape coefficient for cylindrical roofs as a function of h/b (for roof areas with the slope $\beta \leq 70°$)

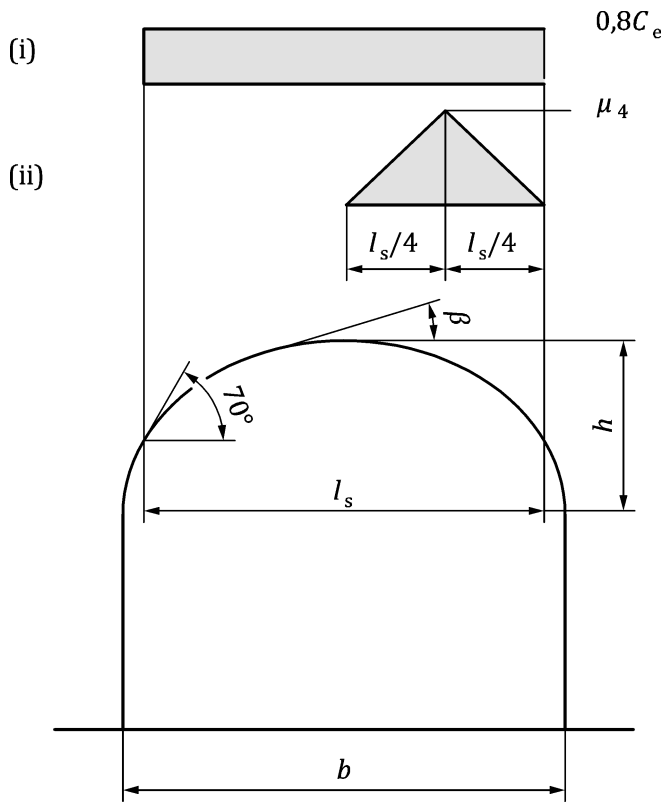

Key

(i) Balanced load arrangement

(ii) Unbalanced load arrangement

Figure 7.8 — Snow load arrangements for cylindrical roofs

7.5.6 Domes

(1) The balanced load arrangement that should be used for spherical domes is given in Figure 7.9 case (i).

(2) The unbalanced load arrangement that should be used for spherical domes is given in Figure 7.9 case (ii).

(3) The snow load shape coefficient that should be used for the balanced load arrangement on spherical domes ($h/b \geq 0{,}05$) is given in Figure 7.9 case (i).

(4) The snow load shape coefficient μ_4 that should be used for unbalanced load arrangements on spherical domes ($h/b \geq 0{,}05$) is given in 7.5.5 (3) and applied as specified in Figure 7.9 case (ii).

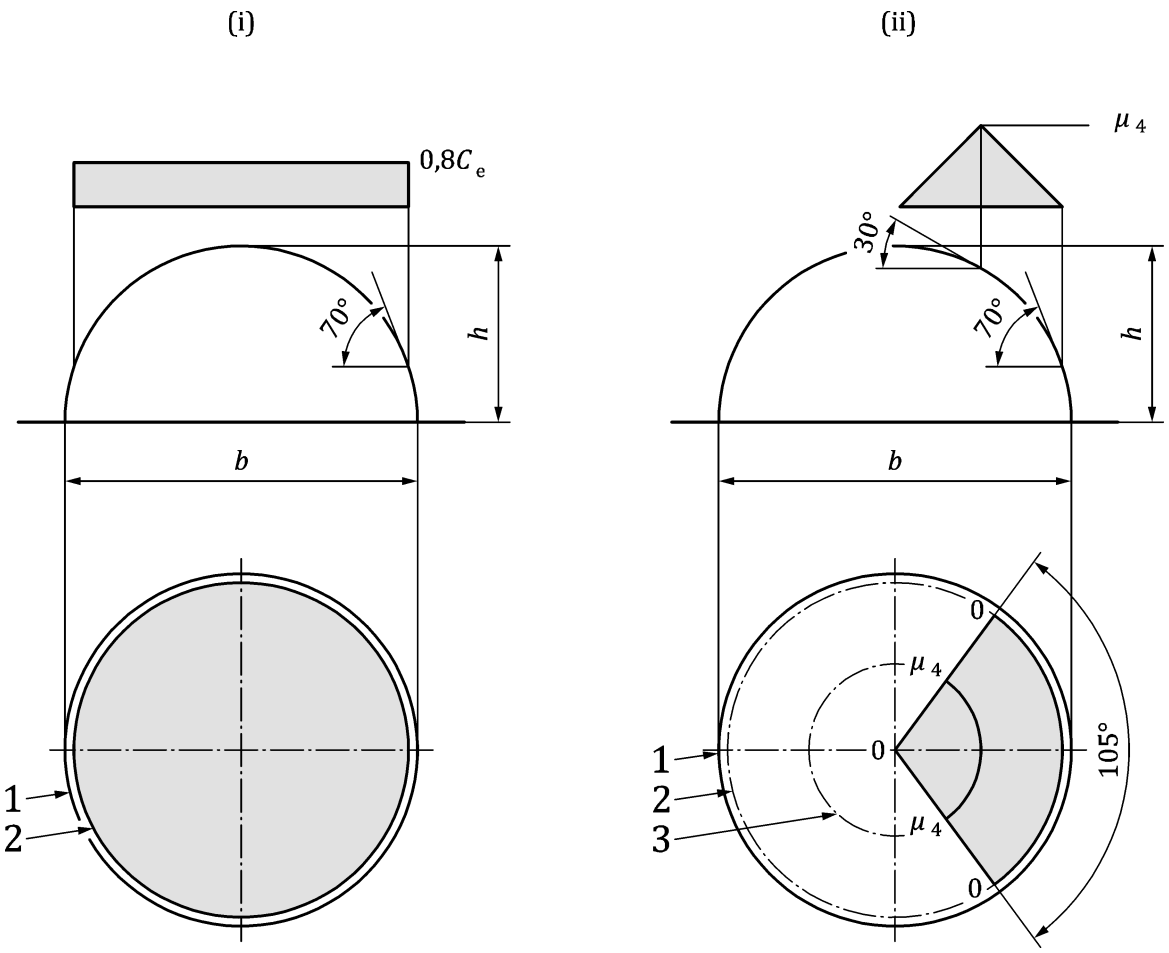

Key

(i) Balanced load arrangement

(ii) Unbalanced load arrangement

1 Structural perimeter

2 70 degrees tangent

3 30 degrees tangent

Figure 7.9 — Snow load arrangements for domes

(5) For domes with $h/b < 0{,}05$ only the balanced load case, given in Figure 7.9 case (i), should be considered.

7.5.7 Roof abutting and close to taller construction works

(1) The load arrangements and snow load shape coefficients which should be used for roofs abutting to taller construction works, with upper roofs either flat or pitched, are given in this paragraph.

(2) The balanced load arrangement on roofs abutting and close to taller construction works which should be used is shown in Figure 7.10, case (i).

(3) The unbalanced load arrangement on roofs abutting and close to taller construction works which should be used is shown in Figure 7.10, case (ii).

NOTE See 8.4 for local effects at parapets.

(4) The snow load shape coefficients that should be used for the balanced load arrangement are given either in Formula (7.3) for flat roofs ($\mu_1\left(C_e\right)$) or in Formula (7.7) case (i) for pitched roofs ($\mu_2\left(\alpha_2, C_e\right)$).

(5) The snow load shape coefficients that should be used for unbalanced load arrangement on roofs abutting to taller construction works and parapets on roofs are given in Formula (7.10).

$$\mu_5 = 0,8\, C_e \mu_L + \mu_s + \mu_w \tag{7.10}$$

where

μ_L is the pertinent snow load shape coefficient for the lower roof (e.g. for flat roof $\mu_1\left(C_e\right)$, see 7.5.2, for pitched roofs $\mu_{2,b}\left(\alpha_2, C_e\right)$, see 7.5.3);

μ_s is the snow load shape coefficient that should be used to take into account the sliding part from the upper roof, given by

$$\mu_s = \begin{cases} 0 \quad \text{for } \alpha_1 \le 15° \\ \dfrac{2b_1'}{l_s}\left[\mu_2\left(30°, C_e\right) - 0,6\, \mu_2\left(\alpha_1, C_e\right)\right] \text{ for } \alpha_1 > 15° \end{cases} \tag{7.11}$$

μ_w is the snow load shape coefficient that should be used to take into account the wind driven part of the drift, originating from erosion of the snow cover on both the upper and lower roofs:

$$\mu_w = \left(2 - 1,6\, C_e\right)\left(\frac{\mu_U b_1}{l_s} + \frac{\mu_L b_2}{l_s}\right) \le \max\left\{0, \frac{\gamma h}{C_e s_k} - \mu_s - 0,8\, C_e\, \mu_L\right\} \tag{7.12}$$

μ_U is the pertinent snow load shape coefficient for the upper roof, that should be taken from Formula (7.13), for either flat or pitched upper roofs:

$$\mu_U = \begin{cases} \mu_1\left(C_e\right) \quad \text{for } \alpha_1 \le 5° \\ \mu_2\left(\alpha_1, C_e\right) \quad \text{for } 5° < \alpha_1 \le 15° \\ 0,5\, \mu_2\left(\alpha_1, C_e\right) \text{for } \alpha_1 > 15° \end{cases} \tag{7.13}$$

l_s is the drift length on the lower roof.

$$l_s = \frac{4h}{C_e} \tag{7.14}$$

NOTE 1 Limiting values to l_s are set to $5\,\text{m} \le l_s \le 15\,\text{m}$, unless the National Annex gives different values for use in a country.

NOTE 2 If the clear distance between the neighbouring structures, a, does not exceed the drift length, $0 < a < l_s$, the shape coefficient at the beginning of the lower roof is determined by interpolation between $0,8 C_e \mu_L$ and μ_5 (see Figure 7.10).

NOTE 3 If $b_2 < l_s$ the coefficient at the end of the lower roof is determined by interpolation between $0,8 C_e \mu_L$ and μ_5 (see Figure 7.10).

(6) In the case of an upper roof with a parapet or a retention device with a sufficient height to retain all snow from upper roof, μ_s should be taken equal zero and the value of h should include the height of the retention device.

(7) The snow load shape coefficients μ_s and μ_w given in 7.5.7 (5) may be applied to other shapes of the upper roof without retention devices according to the pertinent provisions in this clause.

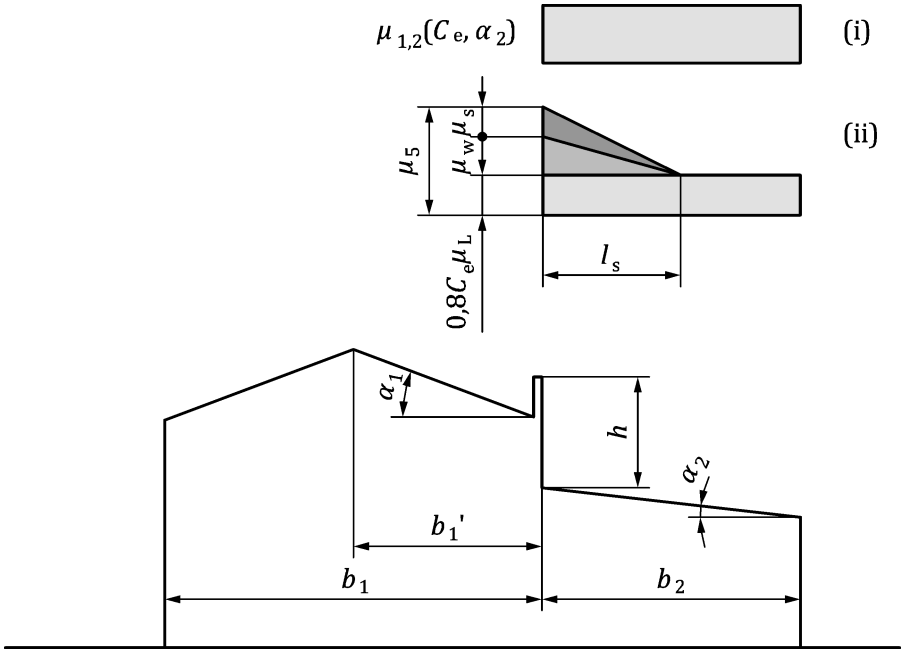

a) This load arrangement applies where a = 0 and $b_2 \geq l_s$

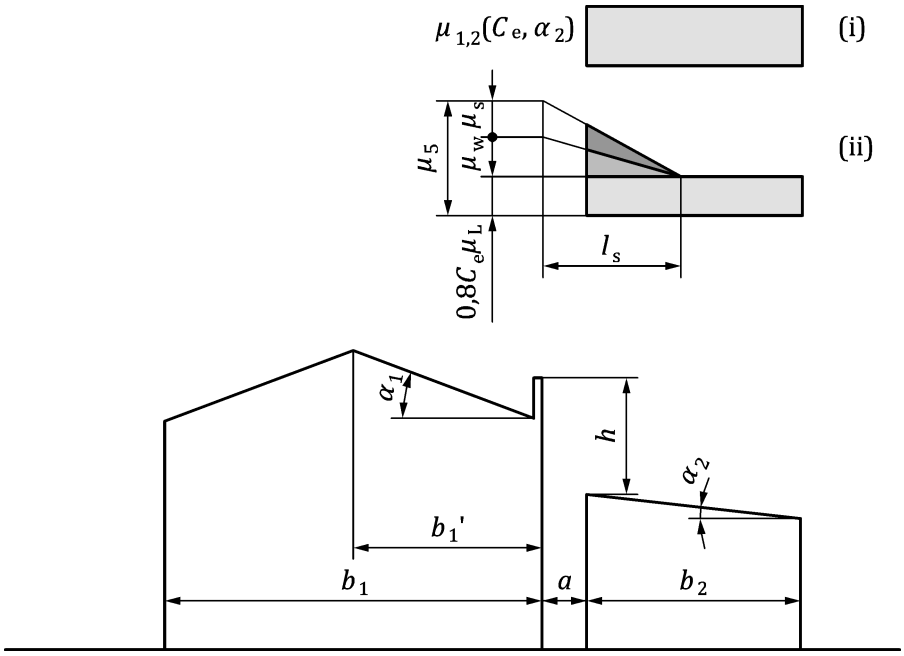

b) This load arrangement applies where 0 < a < l_s

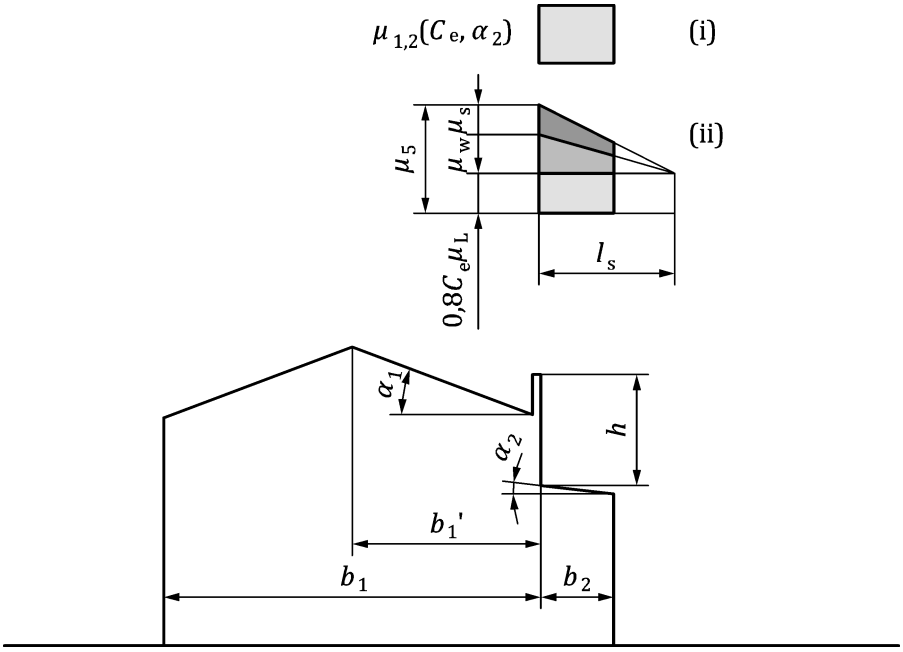

c) This load arrangement applies where $b_2 < l_s$

Key

(i) Balanced load arrangement

(ii) Unbalanced load arrangement

Figure 7.10 — Snow load shape coefficients for roofs abutting and close to taller construction works

8 Local Effects

8.1 Local verifications

(1) The most adverse action effects calculated according to the load arrangements in Clause 7 and the present clause should be applied for the local verifications.

NOTE 1 The National Annex can specify which design situation applies for a particular local effect.

NOTE 2 Where the snow load shape coefficients in 8.2, 8.3 and 8.6 depend on s_k, the values of snow load shape coefficients for exceptional snow loads can be estimated by replacing s_k by s_{Ad}.

8.2 Drifting at obstructions

(1) The snow load shape coefficient for the drifted snow at obstructions with aspect ratio $w/h < 2{,}0$ should be taken as follows:

$$\mu_6 = \frac{0{,}8\ \gamma\ h}{C_e\ s_k} \tag{8.1}$$

where

γ is the snow weight density, specified in 7.5.4 (2);

h is the height of the obstruction;

w is the width of the obstruction (measured perpendicularly to the elevation in Figure 8.1).

(2) The minimum and maximum limiting values for μ_6 should be specified.

NOTE The range for μ_6 is $0{,}8 \leq \mu_6 \leq 2$ unless the National Annex gives different values for use in a Country.

(3) The drift length l_s should be determined from:

$$l_s = \frac{2h}{C_e} \quad \text{with } l_s \leq 15 \text{ m} \tag{8.2}$$

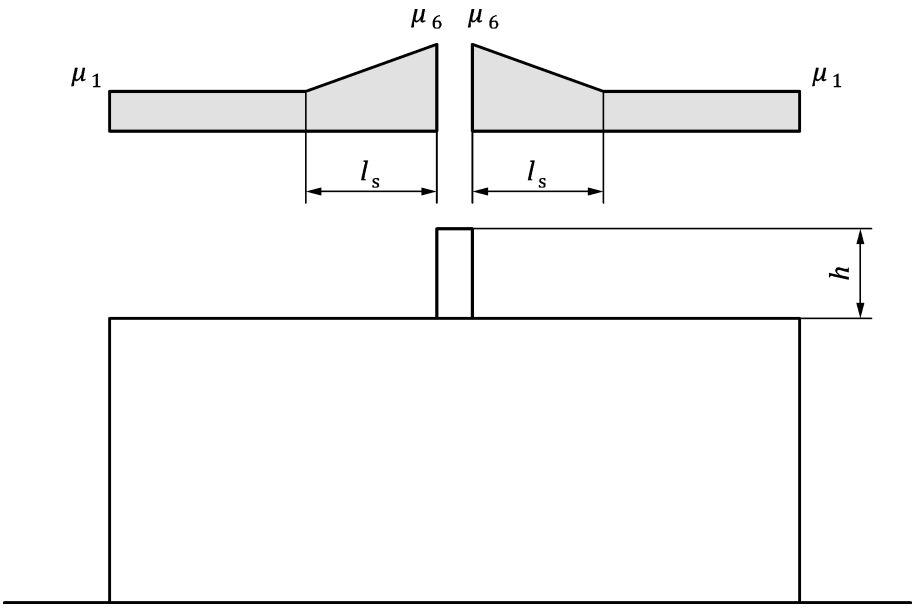

Figure 8.1 — Snow load shape coefficients at obstructions

8.3 Drifting at parapets

(1) The snow load shape coefficient for the drifted snow at parapets with aspect ratio $w/h_p \geq 2{,}0$, should be taken as follows:

$$\mu_7 = \frac{0{,}8}{C_e}\frac{2b}{l_s} \quad \text{with} \quad \mu_7 \leq \min\left\{\frac{0{,}8\,\gamma\,h_p}{C_e\,s_k}, \mu_{7,\max}\right\} \tag{8.3}$$

where

γ is the snow weight density, specified in 7.5.4 (2);

h_p is the height of the parapet;

w is the width of the parapet (measured perpendicularly to the elevation in Figure 8.2);

b is the horizontal dimension of the roof.

NOTE The value of $\mu_{7,\max}$ is 4 unless the National Annex gives different values for use in a Country.

(2) The drift length l_s in Figure 8.2 should be determined from:

$$l_s = \frac{4h_p}{C_e} \quad \text{with } 5 \text{ m} \leq l_s \leq 15 \text{ m} \tag{8.4}$$

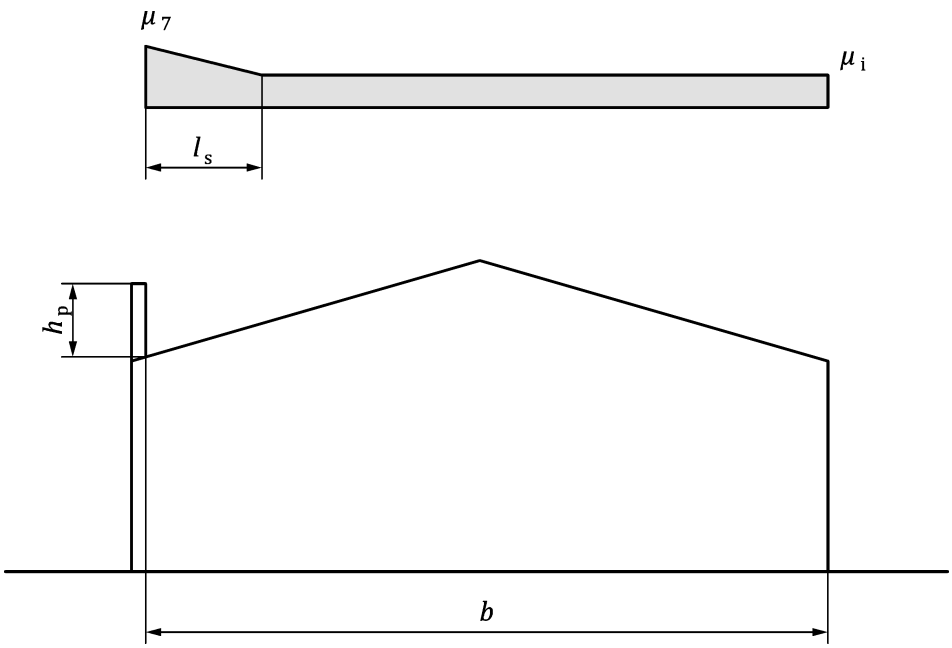

Key

μ_i pertinent shape coefficient (see Clause 7)

Figure 8.2 — Snow load shape coefficients at parapets

8.4 Snow overhanging the edge of a roof

(1) Snow overhanging the edge of a roof should be considered for sites at an altitude greater than h_o above sea level.

NOTE The altitude h_o is 800 m unless the National Annex gives a different value for use in a country.

(2) The design of those parts of a roof cantilevered out beyond the walls should take account of snow overhanging the edge of the roof, in addition to the snow load on that part of the roof.

(3) The snow loads due to the overhang may be assumed to act at the edge of the roof and may be calculated as follows:

$$s_e = k\, s^2 / \gamma \tag{8.5}$$

where

s_e is the snow load per metre length due to the overhang (see Figure 8.3);

s is the most onerous balanced load case appropriate for the roof under consideration (see 7.1 and 7.5);

γ is the snow weight density.

NOTE 1 For the present calculation γ is taken as 3 kN/m³ unless the National Annex gives a different value for use in a country (see also Annex C).

k is a dimensionless coefficient to take account of the irregular shape of the snow.

NOTE 2 For the present calculation k is taken as $3/d$, but $k \leq d\,\gamma$, where d is the depth of the snow layer on the roof in meters (see Figure 8.3), unless the National Annex gives a different value of k for use in a country.

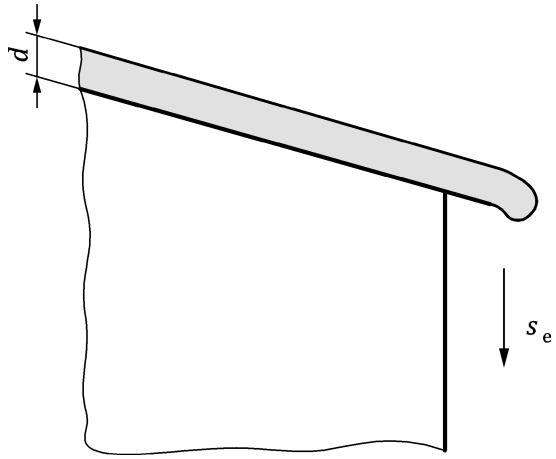

Figure 8.3 — Snow overhanging the edge of a roof

8.5 Snow loads on snow guards and other obstacles

(1) The force F_s exerted on snow guards or other obstacles by a sliding mass of snow, in the direction of sliding, per unit length of the building should be taken as:

$$F_s = s\, b \sin(\alpha) \tag{8.6}$$

where

s is the snow load on the roof relative to the most onerous balanced load case appropriate for roof area from which snow could slide (see 7.1 and 7.5);

b is the width on plan (horizontal) from the guard or obstacle to the next guard or to the ridge;

α is the pitch of the roof, measured from the horizontal.

(2) The coefficient of friction between the snow and the roof should be assumed to be equal to zero.

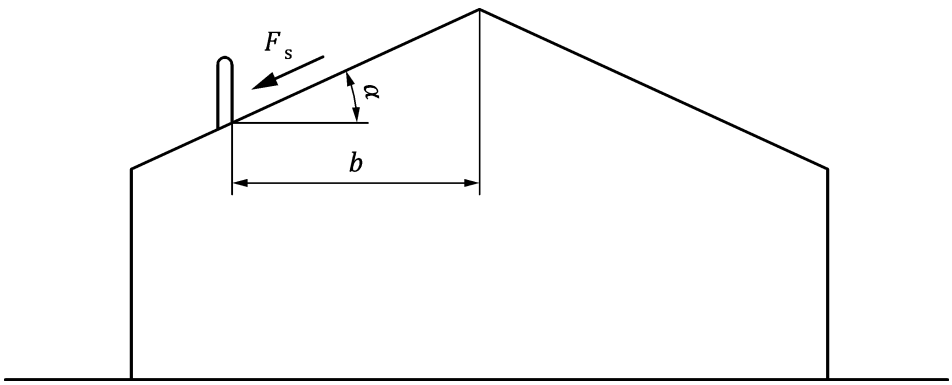

Figure 8.4 — Snow loads on snow guards

8.6 Drifting at intersecting pitched roofs

(1) The unbalanced load arrangement in Figure 8.5 should be used in the valley of intersecting pitched roofs, with $\mu_2\left(\alpha, C_e\right)$ should be taken from Formula (7.7) for case (ii) and μ_8 from Formula (8.7):

$$\mu_8 = 0,9 + 0,7\frac{\alpha_{A-A'}}{30} \text{ with } \mu_8 \le \gamma h / s_k \le \mu_{8\max} \tag{8.7}$$

where

h	is the height of the valley, as shown in Figure 8.5;
γ	is the snow weight density, specified in 7.5.4 (2);
$\alpha_{A\text{-}A'}$	is $\alpha_{A\text{-}A'}$ = arctan[tan(α) sin(90° - α_{inter} / 2)];
α	is the pitch angle;
α_{inter}	is the intersection angle [°].

NOTE 1 $\mu_{8\max}$ is taken as 1,6 unless the National Annex gives a different value for use in a country.

NOTE 2 Figure 8.5 illustrates the snow load shape coefficients for α_{inter} = 90°, for which the angle of pitch of roof $\alpha_{A\text{-}A'}$ = arctan[tan(α) sin(45°)].

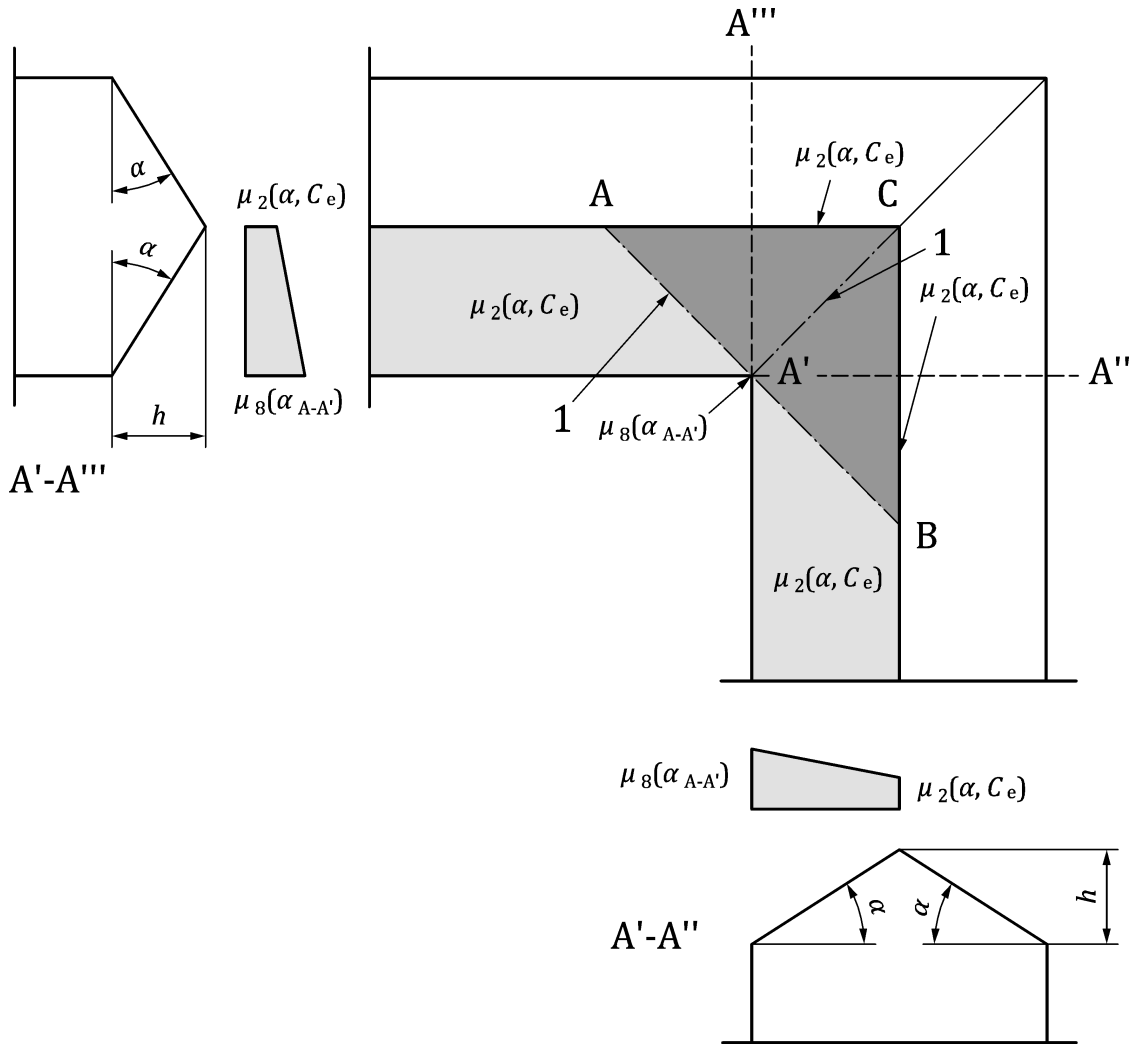

Key

1 Linear variation of the shape coefficients along lines A'-A, A'-B and A'-C

Figure 8.5 — Snow load shape coefficients for intersecting pitched roofs

Annex A
(informative)

Ground snow load maps

A.1 Use of this Informative Annex

(1) This Informative Annex provides complementary guidance to Clause 6 for the elaboration of national ground snow load maps.

NOTE National choice on the application of this Informative Annex are given in the National Annex. If the National Annex contains no information on the application of this informative annex, it can be used.

A.2 Scope and field of application

(1) This Informative Annex is intended:

— to help National Authorities to redraft their national maps;

— to establish harmonized procedures to produce the national maps.

A.3 Treatment of ground snow load measurements

(1) To determine snow load on the ground, s_k, a sequence of maximum yearly snow loads should be used.

NOTE A period of winter season, rather than a calendar year, is more appropriate to specify a ground snow load maximum.

(2) For areas where there is snow every year, the recording length should be at least 20 years. For areas with larger variability, a longer recording length should be used. The data should be checked for measurement and transmission errors.

NOTE Records of water equivalents are preferred, however other data such as those based on snow depth can be used.

(3) Ground snow load records for a site with a shorter period may be used if correlated with data from nearby site(s) with sufficiently long-term records.

(4) Statistical treatment of measurements should generally take into account that spatial representativeness of such data is highly dependent on the method of observation and the sheltering of the observation area. Whether or not a meteorological station typifies a region should therefore be carefully considered.

(5) For climates with a snow cover over the complete winter season in every winter, annual maximum snow loads may be considered as the appropriate basis for extreme value statistics. For climates which have more than one independent period of snow cover over the winter season, the statistical stability of the estimated parameters may be increased by using peaks over a specific threshold.

(6) For climates not having snow every year, the fitting of data should only use non-zero snow load amplitudes and the probabilistic distribution should then account for probability of a year with a zero ground snow load.

(7) Detailed comparisons of different probabilistic distributions should be made to identify an appropriate distribution for annual maxima of ground snow loads.

NOTE General experience indicates that a Gumbel distribution (Type I extreme value distribution – maximum values) or a lognormal distribution with the origin at zero often provide an appropriate model.

(8) Special care should be taken if the observations include unusual large values in terms of outliers.

(9) If the ratio of the largest value to the characteristic load determined without the inclusion of that value is greater than 1,5, then the largest value may be treated as an exceptional value and disregarded from the sample to calculate the characteristic value of ground snow load.

(10) The results for different probabilistic distributions for the ground snow load, different parameter estimation methods, and related confidence intervals may be used to quantify uncertainty in the estimated characteristic ground snow load. The climatic conditions should be taken into account in the selection of an appropriate method.

A.4 Zoning

(1) A snow zone mapping with constant values throughout the zones, often related to altitude, or a continuous field with isolines may be used.

NOTE Investigations have shown that near the coasts, not only the altitude but also the distance from the coast can influence the ground snow load.

(2) Mapping process should take account of data in neighbouring countries, to limit the inconsistencies across borders, unless physical reasons such as due to orography justify different values.

A.5 Climate change effect

(1) When developing ground snow load maps, an account of possible positive or negative trends in confined ensembles of annual extremes or peaks over a specific threshold should be taken. The evaluation of possible climate change effects should consider this randomness. Climate change scenarios may be used to obtain information on the basic shape of trends which should be considered in the analysis.

(2) Climate change effects may be considered in the elaboration of ground snow load maps by means of change factor maps which are derived from the analysis of future climate projections. Factors of change at the time window t are derived comparing characteristic values obtained from the ensemble of climate projections at the investigated time window t and those at the time window corresponding to the observation period $(t = 1)$ as

$$FC\left(t\right) = \frac{s_{k,CM}\left(t\right)}{s_{k,CM}\left(t = 1\right)} \tag{A.1}$$

Factors of change in the future time windows may be used to evaluate trends for ground snow load maps derived from historical measurements:

$$s_k\left(t\right) = FC\left(\mathrm{t}\right) \cdot s_k \tag{A.2}$$

Maximum values in the investigated time windows may be used to update ground snow load maps considering potential climate change effects:

$$s'_k\left(t\right) = \max_{1 \le t \le \bar{t}} s_k\left(t\right) \tag{A.3}$$

NOTE Uncertainties related to climate change projections can also affect the calibration of the value of partial factor γ_Q; see FprEN 1990:2022, Annex C.

(3) Snow maps should be regularly updated preferably every 20 years.

Annex B
(informative)

Adjustment of ground snow load to return period

B.1 Use of this Informative Annex

(1) This Informative Annex provides complementary guidance to Clause 6 to adjust ground snow load with a mean return period different to that for the characteristic snow load.

NOTE National choice on the application of this Informative Annex are given in the National Annex. If the National Annex contains no information on the application of this informative annex, it can be used.

B.2 Scope and field of application

(1) This Informative Annex is intended to provide information on the determination of ground snow load values associated with different mean return period than the characteristic value.

B.3 Adjustment of the ground snow load according to the return period

(1) Ground snow loads for a mean return period different to that for the characteristic snow load, s_k, may be adjusted to correspond to characteristic values considering appropriate probabilistic distribution of annual ground snow load maxima.

(2) If the available data show that the annual maximum snow load can be assumed to follow a Gumbel probability distribution, then the relationship between the characteristic value of the snow load on the ground and the snow load on the ground for a mean return period of n years may be given by Formula (B.1) (see also Figure B.1):

$$s_n = s_k \left\{ \frac{1 - V\frac{\sqrt{6}}{\pi}\left[ln\left(-ln\left(1 - P_n\right)\right) + 0,577\right]}{\left(1 + 2,59V\right)} \right\} \tag{B.1}$$

where

s_k is the characteristic snow load on the ground;

s_n is the ground snow load with a return period of n years;

P_n is the annual probability of exceedance (equivalent to approximately $1/n$, where n is the mean return period (years));

V is the coefficient of variation of annual maximum snow load.

NOTE 1 Where appropriate, other distribution functions for the adjustment of the return period of ground snow load can be defined by National Authorities.

NOTE 2 Information on the coefficient of variation can be given by National Authorities.

(3) Formula (B.1), or similar relationships for other distributions, may be applied for annual probabilities of exceedance less than 0,2 (i.e. mean return period higher than 5 years).

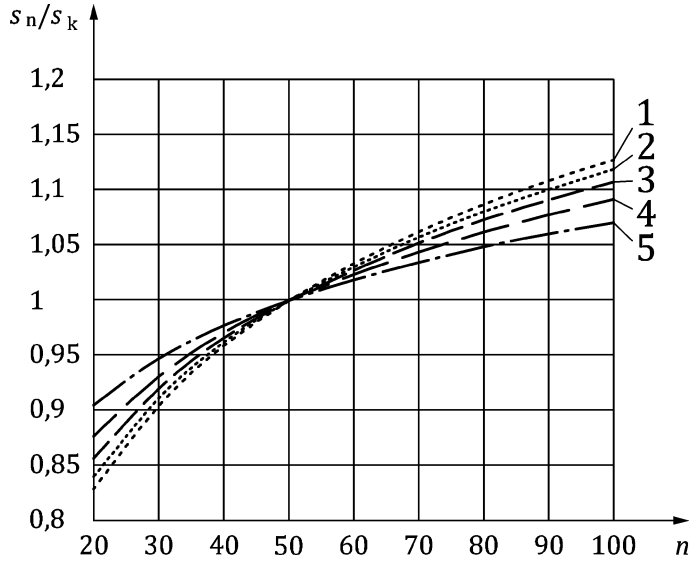

Key

n	years
1	V = 0,6
2	V = 0,5
3	V = 0,4
4	V = 0,3
5	V = 0,2

Figure B.1 — Adjustment of the ground snow load according to return period

Annex C
(informative)

Bulk snow weight density

C.1 Use of this Informative Annex

(1) This Informative Annex provides complementary guidance to Clause 7 and 8.

NOTE National choice on the application of this Informative Annex are given in the National Annex. If the National Annex contains no information on the application of this informative annex, it can be used.

C.2 Scope and field of application

(1) This Informative Annex is intended to help National Authorities to define mean bulk snow weight density.

C.3 Bulk snow weight density

(1) Except where specified in Clauses 7 to 8 indicative values for the mean bulk snow weight density γ on the ground given in Table C.1 may be used.

NOTE The bulk snow weight density varies. In general, it increases with the duration of the snow cover and depends on the site, climate and altitude.

Table C.1 — Mean bulk snow weight density

Type of snow	Bulk snow weight density γ [kN/m³]
Fresh	1,0
Settled (several hours or days after its fall)	2,0
Old (several weeks or months after its fall)	2,5 - 3,5
Wet	4,0

Bibliography

References contained in recommendations (i.e. "should" clauses)

The following documents are referred to in the text in such a way that some or all of their content constitutes highly recommended choices or course of action of this document. Subject to national regulation and/or any relevant contractual provisions, alternative documents could be used/adopted where technically justified. For dated references, only the edition cited applies. For undated references, the latest edition of the referenced document (including any amendments) applies.

None.

References contained in permissions (i.e. "may" clauses)

The following documents are referred to in the text in such a way that some or all of their content expresses a course of action permissible within the limits of the Eurocodes. For dated references, only the edition cited applies. For undated references, the latest edition of the referenced document (including any amendments) applies.

None.

References contained in permissions (i.e. "can" clauses) and notes

The following documents are cited informatively in the document, for example in "can" clauses and in notes.

[1] ISO 3898:2013, *Bases for design of structures — Names and symbols of physical quantities and generic quantities*

[2] ISO 4355:2013, *Bases for design of structures — Determination of snow loads on roofs*

[3] prEN 1991-1-4:202X,[1] *Eurocode 1 — Actions on structures — Part 1-4: General actions — Wind actions*

[1] Under preparation.