EUROPEAN STANDARD

NORME EUROPÉENNE

EUROPÄISCHE NORM

DRAFT
prEN 1993-1-9

March 2023

ICS 91.010.30; 91.080.13

Will supersede EN 1993-1-9:2005

English Version

Eurocode 3: Design of steel structures - Part 1-9: Fatigue

Eurocode 3: Calcul des structures en acier - Partie 1-9: Fatigue

Eurocode 3: Bemessung und Konstruktion von Stahlbauten - Teil 1-9: Ermüdung

This draft European Standard is submitted to CEN members for enquiry. It has been drawn up by the Technical Committee CEN/TC 250.

If this draft becomes a European Standard, CEN members are bound to comply with the CEN/CENELEC Internal Regulations which stipulate the conditions for giving this European Standard the status of a national standard without any alteration.

This draft European Standard was established by CEN in three official versions (English, French, German). A version in any other language made by translation under the responsibility of a CEN member into its own language and notified to the CEN-CENELEC Management Centre has the same status as the official versions.

CEN members are the national standards bodies of Austria, Belgium, Bulgaria, Croatia, Cyprus, Czech Republic, Denmark, Estonia, Finland, France, Germany, Greece, Hungary, Iceland, Ireland, Italy, Latvia, Lithuania, Luxembourg, Malta, Netherlands, Norway, Poland, Portugal, Republic of North Macedonia, Romania, Serbia, Slovakia, Slovenia, Spain, Sweden, Switzerland, Türkiye and United Kingdom.

Recipients of this draft are invited to submit, with their comments, notification of any relevant patent rights of which they are aware and to provide supporting documentation.

Warning : This document is not a European Standard. It is distributed for review and comments. It is subject to change without notice and shall not be referred to as a European Standard.

EUROPEAN COMMITTEE FOR STANDARDIZATION
COMITÉ EUROPÉEN DE NORMALISATION
EUROPÄISCHES KOMITEE FÜR NORMUNG

CEN-CENELEC Management Centre: Rue de la Science 23, B-1040 Brussels

Ref. No. prEN 1993-1-9:2023 E

Contents

Page

European foreword

This document (prEN 1993-1-9:2023) has been prepared by Technical Committee CEN/TC 250 "Structural Codes", the secretariat of which is held by BSI. CEN/TC 250 is responsible for all Structural Eurocodes and has been assigned responsibility for structural and geotechnical design matters by CEN.

This document is currently submitted to the CEN Enquiry.

This document will supersede EN 1993-1-9:2005 and EN 1993-1-9:2005/AC:2009.

The first generation of EN Eurocodes was published between 2002 and 2007. This document forms part of the second generation of the Eurocodes, which have been prepared under Mandate M/515 issued to CEN by the European Commission and the European Free Trade Association.

The Eurocodes have been drafted to be used in conjunction with relevant execution, material, product and test standards, and to identify requirements for execution, materials, products and testing that are relied upon by the Eurocodes.

The Eurocodes recognise the responsibility of each Member State and have safeguarded their right to determine values related to regulatory safety matters at national level through the use of national annexes.

Introduction

0.1 Introduction to the Eurocodes

The Structural Eurocodes comprise the following standards generally consisting of a number of parts:

- EN 1990 Eurocode: Basis of structural and geotechnical design;
- EN 1991 Eurocode 1: Actions on structures;
- EN 1992 Eurocode 2: Design of concrete structures;
- EN 1993 Eurocode 3: Design of steel structures;
- EN 1994 Eurocode 4: Design of composite steel and concrete structures;
- EN 1995 Eurocode 5: Design of timber structures;
- EN 1996 Eurocode 6: Design of masonry structures;
- EN 1997 Eurocode 7: Geotechnical design;
- EN 1998 Eurocode 8: Design of structures for earthquake resistance;
- EN 1999 Eurocode 9: Design of aluminium structures;
- New parts are under development, e.g. Eurocode for design of structural glass.

The Eurocodes are intended for use by designers, clients, manufacturers, constructors, relevant authorities (in exercising their duties in accordance with national or international regulations), educators, soft-ware developers, and committees drafting standards for related product, testing and execution standards.

NOTE Some aspects of design are most appropriately specified by relevant authorities or, where not specified, can be agreed on a project-specific basis between relevant parties such as designers and clients. The Eurocodes identify such aspects making explicit reference to relevant authorities and relevant parties.

0.2 Introduction to EN 1993 (all parts)

EN 1993 (all parts) applies to the design of buildings and civil engineering works in steel. It complies with the principles and requirements for the safety and serviceability of structures, the basis of their design and verification that are given in EN 1990 – Basis of structural design.

EN 1993 (all parts) is concerned only with requirements for resistance, serviceability, durability and fire resistance of steel structures. Other requirements, e.g. concerning thermal or sound insulation, are not covered.

EN 1993 is subdivided in various parts:

- EN 1993-1, Design of Steel Structures — Part 1: General rules and rules for buildings;
- EN 1993-2, Design of Steel Structures — Part 2: Steel bridges;
- EN 1993-3, Design of Steel Structures — Part 3: Towers, masts and chimneys;
- EN 1993-4, Design of Steel Structures — Part 4: Silos and tanks;

- EN 1993-5, Design of Steel Structures — Part 5: Piling;
- EN 1993-6, Design of Steel Structures — Part 6: Crane supporting structures;
- EN 1993-7, Design of steel structures — Part 7: Design of sandwich panels.

EN 1993-1 in itself does not exist as a physical document, but as a document series that comprises the following 14 separate parts, the basic part being EN 1993-1-1:

- EN 1993-1-1, Design of Steel Structures — Part 1-1: General rules and rules for buildings;
- EN 1993-1-2, Design of Steel Structures — Part 1-2: Structural fire design;
- EN 1993-1-3, Design of Steel Structures — Part 1-3: Cold-formed members and sheeting;

  NOTE Cold formed hollow sections supplied according to EN 10219 are covered in EN 1993-1-1.

- EN 1993-1-4, Design of Steel Structures — Part 1-4: Stainless steels;
- EN 1993-1-5, Design of Steel Structures — Part 1-5: Plated structural elements;
- EN 1993-1-6, Design of Steel Structures — Part 1-6: Strength and stability of shell structures;
- EN 1993-1-7, Design of Steel Structures — Part 1-7: Strength and stability of planar plated structures transversely loaded;
- EN 1993-1-8, Design of Steel Structures — Part 1-8: Design of joints;
- EN 1993-1-9, Design of Steel Structures — Part 1-9: Fatigue strength of steel structures;
- EN 1993-1-10, Design of Steel Structures — Part 1-10: Material toughness and through-thickness properties;
- EN 1993-1-11, Design of Steel Structures — Part 1-11: Design of structures with tension components made of steel;
- EN 1993-1-12, Design of Steel Structures — Part 1-12: Additional rules for steel grades up to S960;
- EN 1993-1-13, Design of Steel Structures — Part 1-13: Beams with large web openings;
- EN 1993-1-14, Design of Steel Structures — Part 1-14: Design assisted by finite element analysis.

All subsequent parts numbered EN 1993-1-2 to EN 1993-1-14 treat general topics that are independent from the structural type like structural fire design, cold-formed members and sheeting, stainless steels, plated structural elements, etc.

All subsequent parts numbered EN 1993-2 to EN 1993-7 treat topics relevant for a specific structural type like steel bridges, towers, masts and chimneys, silos and tanks, piling, crane supporting structures, etc. EN 1993-2 to EN 1993-7 refer to the generic rules in EN 1993-1 and supplement, modify or supersede them.

0.3 Introduction to EN 1993-1-9

EN 1993-1-9 gives specific design rules for verification of fatigue resistance of steel structures. It is intended to be used with EN 1990, EN 1991 and EN 1993-1. Matters that are already covered in those documents are not repeated. The focus in EN 1993-1-9 is on design rules that supplement, modify or supersede the equivalent provisions given in EN 1993-1.

0.4 Verbal forms used in the Eurocodes

The verb “shall" expresses a requirement strictly to be followed and from which no deviation is permitted in order to comply with the Eurocodes.

The verb “should” expresses a highly recommended choice or course of action. Subject to national regulation and/or any relevant contractual provisions, alternative approaches could be used/adopted where technically justified.

The verb “may" expresses a course of action permissible within the limits of the Eurocodes.

The verb “can" expresses possibility and capability; it is used for statements of fact and clarification of concepts.

0.5 National annex for EN 1993-1-9

National choice is allowed in this standard where explicitly stated within notes. National choice includes the selection of values for Nationally Determined Parameters (NDPs).

The national standard implementing EN 1993-1-9 can have a National Annex containing all national choices to be used for the design of steel structures to be constructed in the relevant country.

When no national choice is given, the default choice given in this standard is to be used.

When no national choice is made and no default is given in this standard, the choice can be specified by a relevant authority or, where not specified, agreed for a specific project by appropriate parties.

National choice is allowed in EN 1993-1-9 through notes to the following:

1.1(8)	4(6)	5(4)	5(6)
6.1(3) – 3 choices	7.1(4)	8.2(1) – 2 choices	9.1(1)
9.4(3)	B.2(1)	B.2(1)	C.2(4)
C.2(5)	F.2(2)	F.2(5)	F.2(6)
F.3.2(1)	F.4.2.1(3)		

National choice is allowed in EN 1993-1-9 on the application of the following informative annexes:

Annex D	Annex E	Annex F	Annex G

The National annex may contain, directly or by reference, non-contradictory complementary information for ease of implementation, provided it does not alter any provisions of the Eurocodes.

1 Scope

1.1 Scope of EN 1993-1-9

(1) EN 1993-1-9 gives design methods for the verification of the fatigue design situation of steel structures.

NOTE Steel structures consist of members and their joints. Each member and joint can be represented as a constructional detail or as several of the latter.

(2) Design methods other than the stress-based methods, such as the notch strain method or fracture mechanics methods, are not covered by EN 1993-1-9.

(3) EN 1993-1-9 only applies to structures made of all grades of structural steels which conform to EN 1993-1 (all parts), in accordance with the provisions noted in the detail category tables or annexes.

(4) EN 1993-1-9 only applies to structures where execution conforms to EN 1090-2.

NOTE Supplementary execution requirements are indicated in the detail category tables.

(5) EN 1993-1-9 applies to structures operating under normal atmospheric conditions and with sufficient corrosion protection and regular maintenance. The effect of seawater corrosion is not covered.

(6) EN 1993-1-9 applies to structures with hot dip galvanizing in accordance with the provisions noted in the detail category tables or annexes.

(7) Microstructural damage from high temperature (> 150°C) that occurs during the design service life is not covered.

(8) EN 1993-1-9 gives guidance of how to consider post-fabrication treatments that are intended to improve the fatigue resistance of constructional details.

1.2 Assumptions

(1) Unless specifically stated, EN 1990, EN 1991 (all parts) and the other relevant parts of EN 1993-1 (all parts) apply.

(2) The design methods given in EN 1993-1-9 are applicable if:

- the execution quality is as specified in EN 1090-2, and
- the construction materials and products used are as specified in the relevant parts on EN 1993 (all parts), or in the relevant material and product specifications.

(3) The design methods of EN 1993-1-9 are generally derived from fatigue tests on constructional details with large scale specimens that include effects of geometrical and structural imperfections from material production and execution (e.g. the effects of tolerances and residual stresses from welding).

2 Normative references

The following documents are referred to in the text in such a way that some or all of their content constitutes requirements of this document. For dated references, only the edition cited applies. For undated references, the latest edition of the referenced document (including any amendments) applies.

NOTE See the Bibliography for a list of other documents cited that are not normative references, including those referenced as recommendations (i.e. through 'should' clauses) and permissions (i.e. through 'may' clauses).

EN 1090-2, *Execution of steel structures and aluminium structures — Part 2: Technical requirements for steel structures*

EN 1990, *Eurocode - Basis of structural design*

EN 1991 (all parts), *Eurocode 1 - Actions on structures*

EN 1993-1 (all parts), *Eurocode 3 - Design of steel structures*

3 Terms, definitions and symbols

3.1 Terms and definitions

For the purpose of this document terms and definitions given in EN 1990, EN 1991 (all parts), EN 1993-1-1, EN 1993-1-5, EN 1993-1-8 and the following apply.

3.1.1 General

3.1.1.1

fatigue

gradually progressive, localised damaging process of a constructional detail within a structure subject to fatigue action (see 3.1.2.1) that may culminate in failure caused by crack initiation and propagation

Note 1 to entry: The type of failure depends on the definition of fatigue resistance, see 3.1.4.1.

3.1.1.2

design service life

reference period of time that depends on the type of structure for which its constructional details are required to perform safely with an appropriate level of reliability that failure by fatigue cracking will not occur

Note 1 to entry: EN 1990 gives provisions on design service life.

3.1.1.3

safe life concept

design concept in which an appropriate level of reliability for the fatigue design situation is obtained without the need for regular in-service inspection or monitoring for fatigue during the design service life

3.1.1.4

damage tolerant concept

design concept in which an appropriate level of reliability for the fatigue design situation is obtained by implementing prescribed inspection and maintenance for detecting and mitigating fatigue during the design service life

3.1.1.5

constructional detail

part of a member or joint containing a stress raising effect

3.1.1.6

hollow section joint

joint consisting of structural circular hollow sections (CHS) or structural rectangular hollow sections (RHS), or their combinations as used in uniplanar or multi-planar trusses or girders, such as T-, Y-, X-, K-, XX-, and KK-joints

3.1.1.7

rod

circular solid threaded member made of structural steel including stainless steel

3.1.1.8

stress raising effect

local increase in stress caused by discontinuity in loading and/or geometry and/or material

3.1.1.9

stress concentration

computable part of stress raising effect, expressed by the stress concentration factor k_f, see Figure 3.1

Note 1 to entry: Stress concentration factors are usually only available for concentrated load effects and geometric effects.

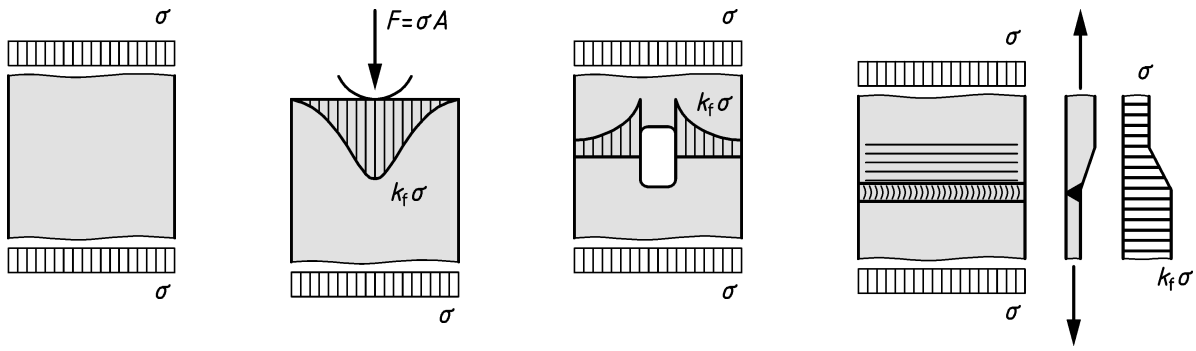

a) reference: without stress concentration (k_f = 1)

b) concentrated load effect

c) macro-geometric effects accounting for large opening

d) macro-geometric effects accounting for eccentricity (maximum tensile stress shown)

Key

σ nominal stress

k_f stress concentration factor

A cross-sectional area

F concentrated load

Figure 3.1 — Examples of stress concentration factor k_f

3.1.1.10

concentrated load effect

stress raising effect arising from discontinuity in loading caused by single loads, usually not taken into account in the detail category tables, e.g. Figure 3.1 b)

3.1.1.11

macro-geometric effect

stress raising effect arising from discontinuity in gross shape of a member, see e.g. Figure 3.1 c) and d), usually not taken into account in the detail category tables

Note 1 to entry: Examples are apertures, re-entrant corners, large openings, shear lag, curved members, secondary bending caused by eccentricities and misalignments beyond the limits accounted for by the detail category tables.

3.1.1.12

misalignment

unintended offset or out-of-straightness (angular mismatch) due to the arrangement or position of jointed elements arising during the manufacturing process

3.1.1.13

eccentricity

intended offset of jointed elements

3.1.1.14

joint-geometric effect

stress raising effect arising from discontinuity in local shape of a member caused by attachments or connected members, see Figure 3.2 c)

Note 1 to entry: Examples are shell bending stresses in addition to membrane stresses in plates caused by one-sided attachment.

3.1.1.15

notch-geometric effect

stress raising effect arising from discontinuity in local geometry of a member at a microscopic scale caused by notch geometry (notch radius), see Figure 3.2 d)

Note 1 to entry: Examples for non-welded member are scratches, corrosion pits and rolling defects. Examples for welded members are weld profile shape, weld toes, weld roots, lack of fusion, slag inclusion, lack of penetration, cold laps and porosity.

3.1.1.16

material effect

stress raising effect arising from discontinuity in material properties, such as regions with different yield strengths in the heat affected zone of welds, that are accounted for within the detail category tables

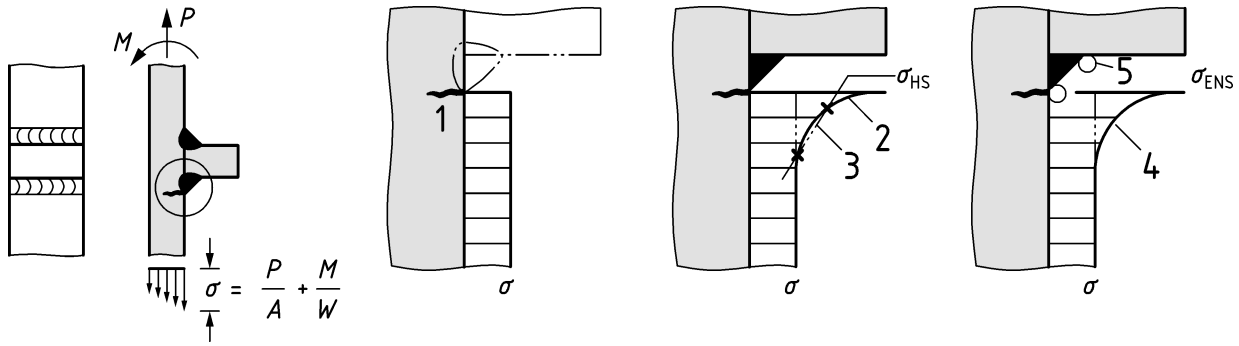

a) transverse weld toe | b) nominal stress distribution | c) hot spot stress distribution | d) effective notch stress distribution

Key

1 potential crack

2 stress distribution on surface accounting for weld with sharply edged weld toes

3 linear stress extrapolation

4 stress distribution on surface accounting for weld with rounded off weld toes

5 round off radius for weld toe

σ nominal stress at potential crack location (here: weld toe)

σ_{HS} hot spot stress at potential crack location (see 3.1.1.20)

σ_{ENS} effective notch stress at potential crack location (see 3.1.1.22)

Figure 3.2 — Examples of different types of normal stress distribution in the vicinity of transverse weld toe

3.1.1.17
nominal stress
σ or τ

elastic stress in a constructional detail adjacent to a potential crack location, disregarding any stress raising effect, Figure 3.2 b)

Note 1 to entry: The nominal stress as specified in EN 1993-1-9 can be a normal stress, a shear stress, a principal stress or an equivalent stress.

Note 2 to entry: The joint-geometric (see 3.1.1.14), the notch-geometric (see 3.1.1.15) and the material effects (see 3.1.1.16) are accounted for by the nominal stress-based detail categories. See 3.1.1.18 if macro-geometric and/or concentrated load effects exist.

Note 3 to entry: For beam-like components with uniform loading, the nominal stress can be calculated by beam theory.

3.1.1.18
modified nominal stress

nominal stress multiplied by an appropriate stress concentration factor k_f to allow for geometric and/or concentrated load effects, see Figures 3.1 b) to d)

Note 1 to the entry: Instead of stress concentration factors, fatigue notch factors k_t can be used. Examples are given in EN 1999-1-3.

3.1.1.19

geometric stress

structural stress

elastic stress within a welded constructional detail accounting for joint-geometric effects (and macro-geometric and concentrated load effects if applicable) and neglecting the notch-geometric and material effects, see Figure 3.2 c)

Note 1 to entry: The notch-geometric (see 3.1.1.13) and the material effects (see 3.1.1.14) are accounted for in Table B.1.

3.1.1.20

hot spot stress

σ_{HS}

stress at the weld toe of the considered constructional detail derived from the geometric stress (see 3.1.1.18) through stress extrapolation

Note 1 to entry: See EN 1993-1-14 for determination of hot spot stress.

3.1.1.21

notch stress

elastic stress in a constructional detail taking into account all stress concentrations, Figure 3.2 d)

3.1.1.22

effective notch stress

σ_{ENS}

peak value of notch stress at potential crack location modelled with a specified effective notch radius, Figure 3.2 d)

Note 1 to entry: See EN 1993-1-14 for determination of effective notch stress.

3.1.1.23

residual stresses

permanent stresses in a member or structure in the absence of any external action

Note 1 to entry: Residual stresses can arise from rolling, cutting and forming processes, thermal treatment, weld shrinkage or lack of fit between members. As external action is absent, the residual stresses locked in a member are self-balancing.

3.1.1.24

inspection

examination for conformity by measuring, observing, or testing relevant characteristics

3.1.2 Fatigue actions

3.1.2.1
fatigue action

action on a structure that is composed of loading events for which the number of reoccurrences cannot be neglected for structural design as the action effect on the constructional details may cause fatigue

Note 1 to entry: Examples of fatigue actions are:

- axle loads of lorries on road bridges,
- transverse forces due to alternate vortex-shedding on masts, towers and chimneys,
- wheel loads of cranes on crane runway beams.

Note 2 to entry: EN 1990 gives representative values of the actions on structures for the fatigue design situation.

3.1.2.2
loading event (load cycle)

period of time with a defined variation in magnitude and/or point of application of the fatigue action that can be considered to reoccur a number of times

Note 1 to entry: Examples of loading events are:

- sequence summarizing approach, passage and departure of a lorry or a railway train in case of bridges,
- shedding of a single vortex in case of masts, towers, chimneys,
- sequence of crane operations commencing when a payload is hoisted and ending when the crane is ready to hoist the next payload in case of crane runway beams.

3.1.2.3
loading history

presentation of the expected fatigue action on a structure (considering prediction inaccuracy) during its design service life by arranging the loading events in chronological sequence

3.1.2.4

action spectrum

evaluation of the loading history of a structure presenting the different levels of fatigue action with the associated relative frequency (number of stress cycles) in descending order by neglecting sequence effects

Note 1 to entry: The fatigue action can be described by ordinary spectra (relationship of different action levels Q_i and associated numbers of load cycles N_i) or by cumulative spectra (also called sum-spectra; relationship of different action levels Q_i and associated number of load cycles ΣN_i for which this action level is reached or exceeded). Figure 3.3 shows selected types of action spectra that are commonly used:

- discrete action spectrum of different action levels Q_i, Figure 3.3 a)
- continuous loading spectrum characterized by Q_{max}, N_{max} and a standardized spectrum shape, Figure 3.3 b)
- equivalent constant loading spectrum characterized by Q_e and N_{max}, Figure 3.3 c)
- equivalent constant loading spectrum characterized by $Q_{e,2}$ and 2×10^6 load cycles representing a simplified fatigue load model in EN 1991, Figure 3.3 d).

Note 2 to entry: EN 1990 contains general provisions for structures for which EN 1991 does not provide loading spectra.

Note 3 to entry: The equivalent constant loading spectra characterized by $Q_{e,2}$ and 2×10^6 load cycles replace real discrete or continuous load spectra.

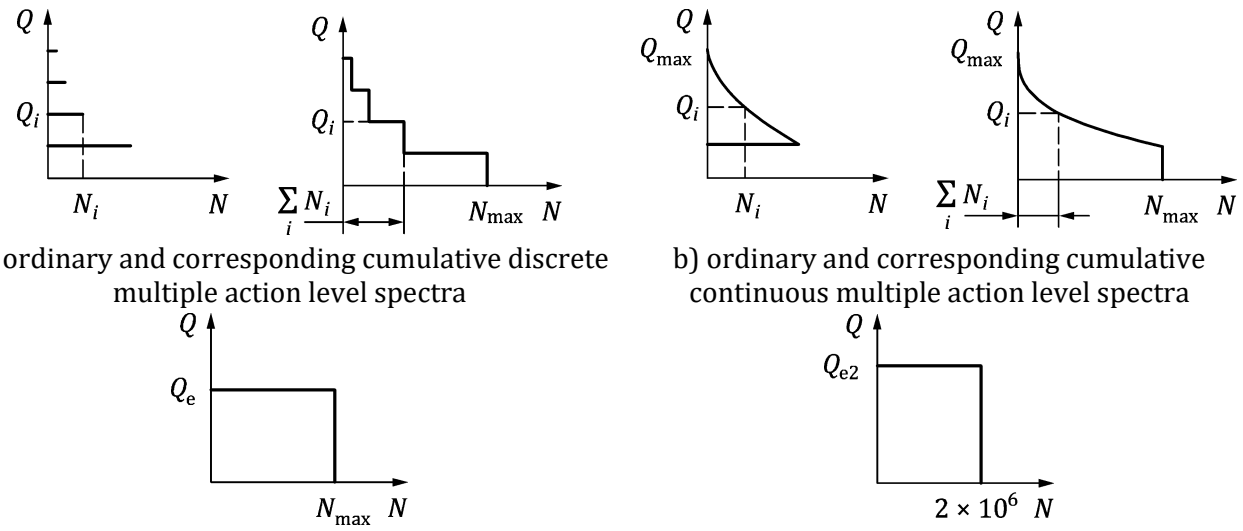

a) ordinary and corresponding cumulative discrete multiple action level spectra

b) ordinary and corresponding cumulative continuous multiple action level spectra

c) equivalent constant 'single action level spectrum

d) equivalent constant 'single action level spectrum with 2×10^6 load cycles

Key

N_i	number of cycles at action level Q_i
ΣN_i	number of cycles for which action level Q_i is reached or exceeded
N_{max}	total number of cycles
Q_i	action level
Q_e	load level of damage equivalent constant action spectrum
$Q_{e,2}$	load level of damage equivalent constant action spectrum with 2×10^6 load cycles
Q_{max}	representative value of fatigue action spectrum

Figure 3.3 — Commonly used representations of action spectra

3.1.3 Fatigue action effect

3.1.3.1

fatigue action effect

resulting stress effect from the application of the fatigue action on a constructional detail that is composed of stress cycles

3.1.3.2

stress cycle

period of time (denoted '1' in Figure 3.4) with a defined stress variation between a maximum and minimum stress starting and ending at the same stress level

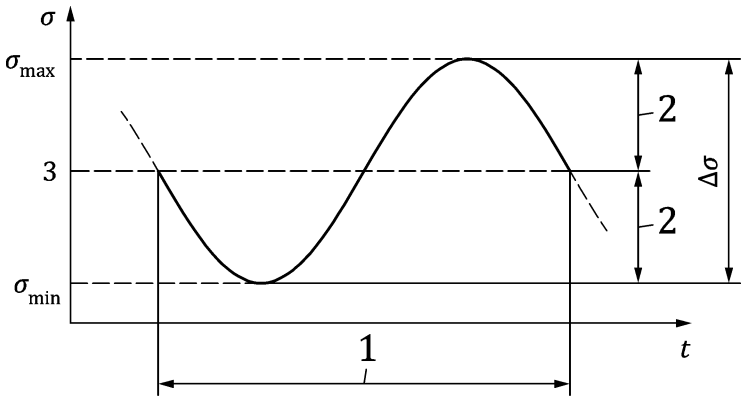

Key

σ_{min}	minimum stress
σ_{max}	maximum stress
$\Delta\sigma$	stress range
t	time
1	stress cycle
2	stress amplitude
3	mean stress

Figure 3.4 — Stress cycle parameters (also applicable for shear stress cycles)

3.1.3.3

stress history

presentation of the expected fatigue action effect by arranging the stress cycles in chronological sequence

3.1.3.4

stress range

difference between maximum and minimum stress of a stress cycle, see Figure 3.4

3.1.3.5

stress ratio

ratio of minimum and maximum stress of a particular stress cycle, with stresses calculated including the static load effects from the relevant combination of actions

Note 1 to entry: The influence of stress ratio only exists for non-welded constructional details and for welded constructional details with thermal stress relief or post-weld treatment as specified in Annex F.

3.1.3.6

thermal stress relief

reduction in residual stress as a result of thermal treatment (e.g. post weld heat treatment)

3.1.3.7

stress amplitude

half of stress range of a particular stress cycle, denoted '2' in Figure 3.4

3.1.3.8

constant amplitude fatigue action effect

fatigue action effect where all stress cycles have the same stress range

3.1.3.9

variable amplitude fatigue action effect

fatigue action effect where the stress ranges vary between stress cycles

3.1.3.10

stress-range spectrum

evaluation of expected stress history presenting the different stress ranges and the associated relative frequency (number of stress cycles) commonly presented in descending order neglecting sequence effects through cycle counting methods, such as the rainflow and reservoir methods

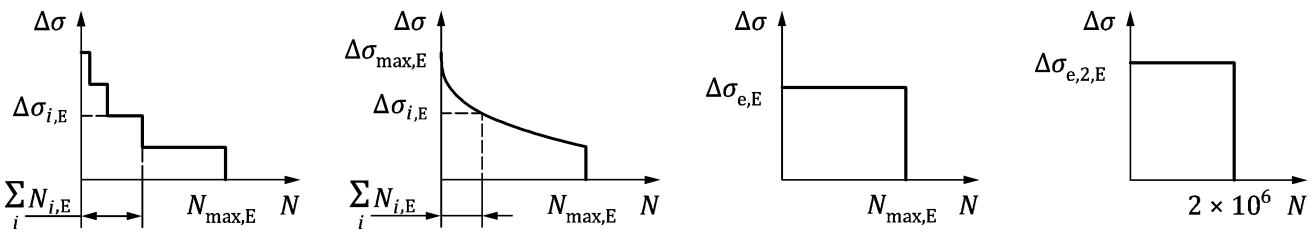

a) discrete cumulative variable amplitude spectrum

b) continuous cumulative variable amplitude spectrum

c) equivalent constant amplitude spectrum

d) equivalent constant amplitude spectrum with 2×10^6 stress cycles

Key

$\Delta\sigma_{i,E}$	stress range level
$\Delta\sigma_{max,E}$	maximum stress range
$N_{i,E}$	number of stress cycles at level $\Delta\sigma_{i,E}$
$\Sigma N_{i,E}$	number of stress cycles for which $\Delta\sigma_{i,E}$ is reached or exceeded
$N_{max,E}$	total number of stress cycles
$\Delta\sigma_{e,E}$	damage equivalent stress range
$\Delta\sigma_{e,2,E}$	damage equivalent stress range with 2×10^6 stress cycles

Figure 3.5 — Commonly used representations of stress-range spectra

Note 1 to entry: As for action spectra in Figure 3.3, the fatigue action effect can also be described by ordinary spectra (relationship of applied stress ranges $\Delta\sigma_{i,E}$ or $\Delta\tau_{i,E}$ and associated numbers of stress cycles $N_{i,E}$) or by cumulative spectra (also called sum-spectra; relationship of applied stress ranges $\Delta\sigma_{i,E}$ or $\Delta\tau_{i,E}$ and associated number of stress cycles $\Sigma N_{i,E}$ for which this stress range is reached or exceeded). The following types of stress-range spectra are commonly used:

- discrete spectrum of different stress range levels $\Delta\sigma_{i,E}$ or $\Delta\tau_{i,E}$ and associated numbers of stress cycles $N_{i,E}$, see Figure 3.5 a),
- continuous spectrum characterized by maximum stress range $\Delta\sigma_{max,E}$ or $\Delta\tau_{max,E}$, total number of stress cycles $N_{max,E}$ and a standardized spectrum shape, see Figure 3.5b),
- equivalent constant stress range spectrum with $\Delta\sigma_{e,E}$ or $\Delta\tau_{e,E}$ and total number of stress cycles $N_{max,E}$, see Figure 3.5 c),
- equivalent constant stress range spectrum with $\Delta\sigma_{e,2,E}$ or $\Delta\tau_{e,2,E}$ and 2×10^6 stress cycles, see Figure 3.5 d).

Note 2 to entry: The equivalent constant stress range spectrum with $\Delta\sigma_{e,2,E}$ and 2×10^6 stress cycles is the effect of a simplified fatigue load model in EN 1991 representing an equivalent loading spectrum with $Q_{e,2}$ and 2×10^6 load cycles (see 3.1.2.4). The fatigue load model causes a stress range that is adjusted by λ-values to obtain $\Delta\sigma_{e,2,E}$. The λ-values account for the influence of the real loading spectrum and are dependent on the type of structure (bridge, mast, crane runway etc.) and the kind of stress.

Note 3 to entry: For some applications, a load cycle can cause multiple stress cycles for the considered constructional detail. The number of stress cycles (NE) rather than the number of load cycles (N) is always decisive for the fatigue design situation.

3.1.3.11

cycle counting

process of transforming a variable amplitude stress history into a stress range spectrum, each with a particular stress range, such as the rainflow method and reservoir method

3.1.3.12

rainflow method

particular cycle counting method of producing a stress-range spectrum from a given stress history

Note 1 to entry: For the mathematical determination see prEN 1990:2021 Annex F.

3.1.3.13

reservoir method

particular cycle counting method of producing a stress-range spectrum from a given stress history

Note 1 to entry: For the mathematical determination see prEN 1990:2021 Annex F.

3.1.4 Fatigue resistance

3.1.4.1

fatigue resistance

capacity of a constructional detail to withstand fatigue actions without fatigue failure, with an appropriate level of reliability

3.1.4.2

fatigue life

number of cycles that a constructional detail can withstand without fatigue failure

Note 1 to entry: The fatigue life depends on the stress range spectrum. For a particular structure, the fatigue life can alternatively be expressed as a period of time.

3.1.4.3

fatigue resistance curve

calculation model for the fatigue resistance of a constructional detail that establishes a quantitative relationship between stress range $\Delta\sigma$ and the corresponding endurance N_R, see Figure 3.6 a)

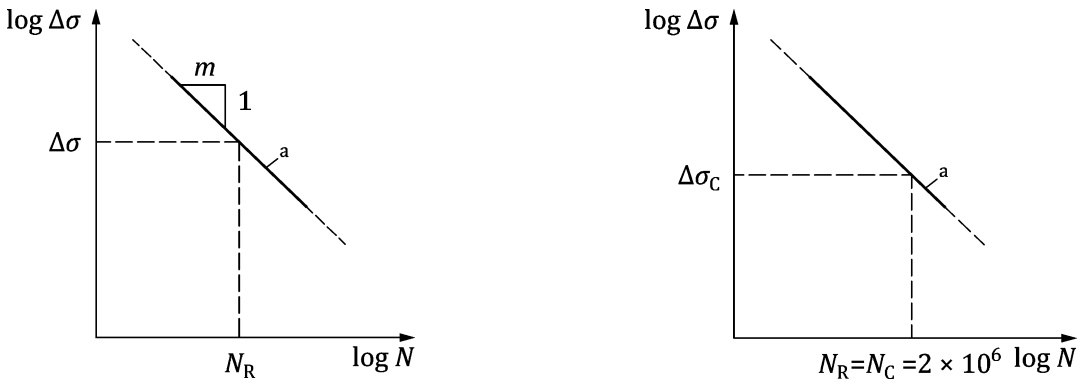

a) Endurance of any stress range

b) Reference value at 2×10^6 stress cycles

Key

a	fatigue resistance curve
m	slope parameter of fatigue resistance curve
$\Delta\sigma$	stress range
N	number of cycles
N_R	endurance associated with $\Delta\sigma$
$\Delta\sigma_C$	reference value at 2×10^6 stress cycles

Figure 3.6 — Definition of endurance and reference value of fatigue resistance curve (also applicable for shear stressing)

Note 1 to entry: The characteristic fatigue resistance curves given in EN 1993-1-9 are lower bound values based on the evaluation of fatigue tests with large scale test specimens.

Note 2 to entry: The characteristic fatigue resistance curves are also known as S-N curves or Wöhler curves.

Note 3 to entry: For simplification, the characteristic fatigue resistance curves of the constructional details in this document are attributed to detail categories.

3.1.4.4

endurance

N_R

fatigue life of a constructional detail under a stress range $\Delta\sigma$ or $\Delta\tau$ that is obtained from the corresponding fatigue resistance curve, see Figure 3.6 a)

3.1.4.5

characteristic reference value of fatigue resistance

$\Delta\sigma_C$, $\Delta\tau_C$

mechanical property of a constructional detail expressing its characteristic fatigue resistance in terms of a stress range $\Delta\sigma_C$ or $\Delta\tau_C$ for an endurance of $N_R = N_C = 2\times10^6$ stress cycles, see Figure 3.6 b)

Note 1 to entry: 'Reference value of fatigue resistance' is also commonly referred to as 'fatigue strength'.

3.1.4.6

detail category

characteristic reference value $\Delta\sigma_C$ or $\Delta\tau_C$ of fatigue resistance in N/mm² identifying a particular fatigue resistance curve

Note 1 to entry: The detail category attributed to a particular constructional detail can be obtained from the first row of the detail category tables depending on the chosen design stress method (see 6.1).

3.1.4.7

slope parameter

m

parameter of the fatigue resistance curve expressing the intensity of fatigue damage, see Figure 3.6 a)

Note 1 to entry: In mathematics, the slope parameter is identical with the negative inverse slope of the fatigue resistance curve.

3.1.4.8

constant amplitude fatigue limit

CAFL

$\Delta\sigma_D$, $\Delta\tau_D$

characteristic maximum stress range, for constant or variable stress range spectra, for which a constructional detail can withstand an infinite number of stress cycles without fatigue damage, see Figure 3.7

Note 1 to entry: Figure 3.7 is a simplification. The verification with respect to the CAFL, that takes partial factors into account, is described in 9.3.

Note 2 to entry: The verification with respect to the CAFL for design situations with variable amplitude fatigue action effect is only possible where the real maximum stress range is known and stays below $\Delta\sigma_D$ or $\Delta\tau_D$, Figure 3.7 b). The fatigue load models in EN 1991 do not provide the real maximum stress range. See details in 9.3.

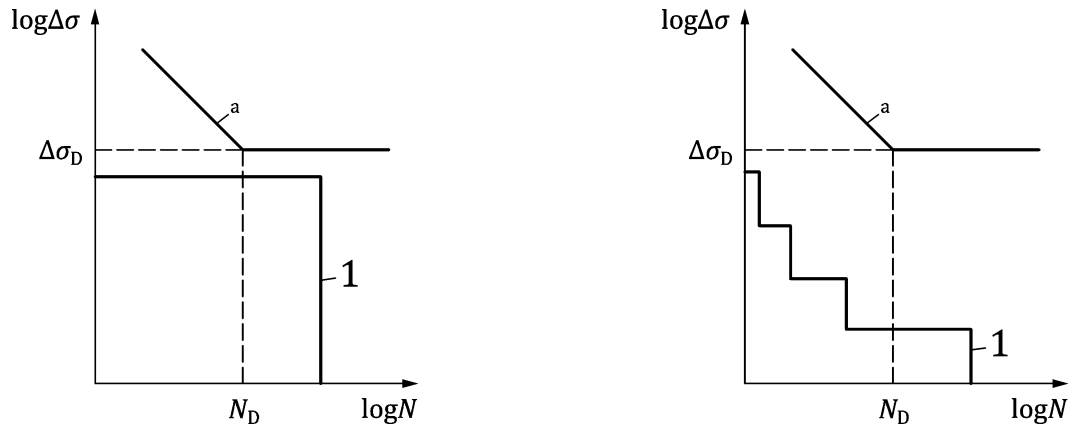

a) constant amplitude fatigue action effect

b) variable amplitude fatigue action effect with known maximum stress range

Key

1	stress range spectrum not contributing to fatigue damage
a	fatigue resistance curve
$\Delta\sigma_D$	CAFL
N_D	number of stress cycles linked with the CAFL

Figure 3.7 — Spectra with all stress ranges below CAFL (also applicable for shear stressing)

3.1.4.9

variable amplitude fatigue limit

VAFL

$\Delta\sigma_L$

characteristic maximum stress range, for variable amplitude stress range spectra, below which the stress ranges do not need to be considered in calculating the fatigue damage

Note 1 to entry: For constructional details with a fatigue resistance curve having only a slope parameter m_1, the value of the CAFL is the same as that of the VAFL. These are:

- lattice girder joints made of hollow sections subject to normal stress ranges,
- all constructional details subject to shear stress ranges.

Thus, all stress ranges below $\Delta\sigma_D$ or $\Delta\tau_D$ are not considered in the fatigue damage calculation for constructional details with such fatigue resistance curves. Figure 3.8 is a simplification neglecting partial factors.

Note 2 to entry: For constructional details with a fatigue resistance curve having slope parameters m_1 and m_2, the stress ranges between $\Delta\sigma_D$ and $\Delta\sigma_L$ contribute to fatigue damage, if the stress range spectrum also comprises stress ranges above $\Delta\sigma_D$.

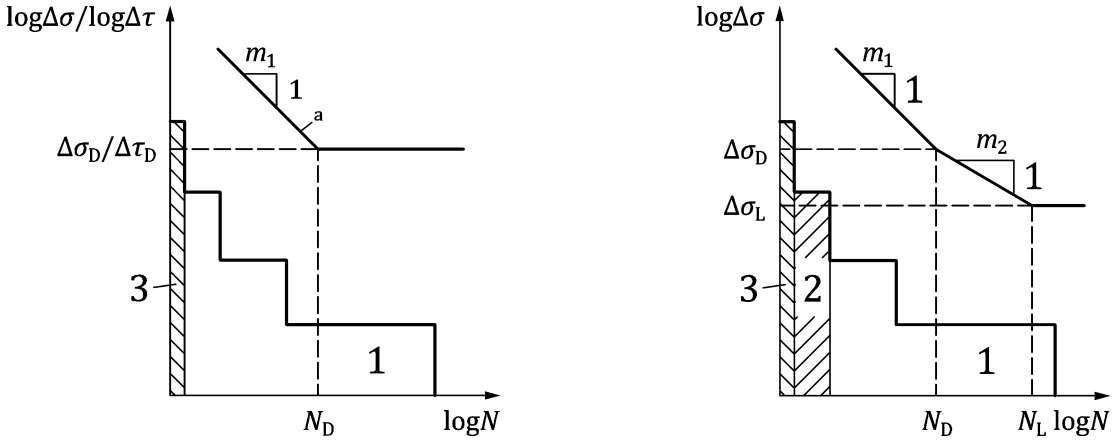

a) Fatigue resistance curve with same CAFL and VAFL levels

b) Fatigue resistance curve with separate CAFL and VAFL levels

Key

1	stress ranges not contributing to fatigue damage
2	stress ranges contributing to fatigue damage with slope parameter m_2
3	stress ranges contributing to fatigue damage with slope parameter m_1
a	fatigue resistance curve
$\Delta\sigma_D$	CAFL for details subject to normal stresses
$\Delta\tau_D$	CAFL for details subject to shear stresses
$\Delta\sigma_L$	VAFL for details subject to normal stresses and two-slope fatigue resistance curve
N_D	number of stress cycles linked with the CAFL
N_L	number of stress cycles linked with the VAFL

Figure 3.8 — Spectra with stress ranges above and below CAFL

3.1.4.10

manual welding

welding in which all operations are carried out manually (the electrode holder, gun, torch or blowpipe is manipulated by hand)

3.1.4.11

fully mechanized welding

welding in which all main operations (excluding the handling of the work piece) are performed automatically

Note 1 to entry: Manual adjustment of welding variables during welding is possible.

3.1.4.12

automatic welding

welding in which all operations are performed automatically

Note 1 to entry: Manual adjustment of welding variables during welding is not possible.

3.1.4.13

High Frequency Mechanical Impact (HFMI) treatment

continuous peening process carried out by traversing a hardened rounded tipped tool along a surface whilst it is subjected to high frequency hammer blows produced by machine

Note 1 to entry: Qualification involves application of a pre-approved procedure to a specific welded joint geometry, which is then subjected to fatigue testing.

Note 2 to entry: Investigation in [1] showed that the following HFMI technologies are comparable:

- HiFIT (High Frequency Impact Treatment)
- PIT (Pneumatic Impact Treatment)
- UIT (Ultrasonic Impact Treatment).

3.1.4.14

operator

appropriately trained person who is able to operate the HFMI-device properly

3.1.4.15

device manufacturer

company that manufactures the HFMI-device

3.1.5 Fatigue verification

3.1.5.1

fatigue damage

D_i

fatigue damage due to a stress range $\Delta\sigma_{i,E}$ with $N_{i,E}$ stress cycles ($D_i = N_{i,E} / N_{i,R}$), the ratio of the number of cycles, $N_{i,E}$, of a particular stress range applied to a constructional detail and the endurance, $N_{i,R}$, of this constructional detail under the same stress range

3.1.5.2

accumulated fatigue damage

D

sum of fatigue damages from all stress ranges in a spectrum

3.1.5.3

Miner's summation

linear cumulative summation of the fatigue damage from all stress cycles accounted for in a stress-range spectrum, based on the Palmgren-Miner rule

3.2 Symbols

Latin upper-case letters

A	cross-sectional area
A_s	stress area of the bolt or rod
CAFL	Constant Amplitude Fatigue Limit
CHS	Circular Hollow Section
D	accumulated fatigue damage due to different stress ranges ($D = \Sigma D_i$)
D_i	fatigue damage due to a stress range $\Delta\sigma_{i,E}$ with $N_{i,E}$ stress cycles ($D_i = N_{i,E} / N_{i,R}$)
EVM	Equivalent von Mises
F	concentrated load
F_B	force acting on the bolt or rod
F_C	reduction of the compressive force of the clamped components due to F_T
F_T	external tensile force applied to the preloaded bolted joint or joint with rod
FEM	Finite Element Method
FLM	Fatigue Load Model
HFMI	High Frequency Mechanical Impact treated state
I	second moment of area
N	number of cycles
N_C	number of stress cycles associated with the characteristic reference value of fatigue resistance
N_D	number of stress cycles associated with the characteristic constant amplitude fatigue limit
NDT	Non Destructive Testing
NDP	Nationally Determined Parameter
N_i	number of load cycles of an applied fatigue action level Q_i
$N_{i,E}$	number of stress cycles of an applied stress range $\Delta\sigma_{i,E}$
$N_{i,R}$	number of stress cycles which can be resisted by a constructional detail under an applied stress range $\Delta\sigma_{i,E}$ until failure (endurance)
N_L	number of stress cycles associated with the variable amplitude fatigue limit
N_{max}	total number of load cycles
$N_{max,E}$	total number of stress cycles
N_R	endurance
N_{Rd}	design value of endurance
PS	principal stress
Q_{fat}	fatigue action
Q_e	equivalent action applied for N_{max} load cycles
$Q_{e,2}$	equivalent action applied for 2×10^6 load cycles

Q_i	action value applied for N_i load cycles
Q_{max}	maximum action value
R	stress ratio ($R = \sigma_{min}/\sigma_{max}$)
RHS	Rectangular Hollow Section
$S(t)$	first moment of area
V	shear force in a cross section
VAFL	Variable Amplitude Fatigue Limit
V_B	shear force per shear plane acting on the bolt or rod
VM	Von Mises

Latin lower-case letters

aw	as-welded
k_1	magnification factor for nominal stress ranges to account for secondary bending moments in trusses
k_f	stress concentration factor
k_s	reduction factor for fatigue resistance (in terms of stress) to account for size effects
m	slope parameter of a fatigue resistance curve
m_{aw}	slope parameter of fatigue resistance curve for as-welded state
m_{HFMI}	slope parameter of fatigue resistance curve for HFMI state
t	plate thickness

Greek upper-case letters

$\Delta\sigma_C$, $\Delta\tau_C$	characteristic reference value of fatigue resistance at $N_C = 2\times10^6$ stress cycles
$\Delta\sigma_{C,HFMI}$	characteristic reference value of the fatigue resistance at $N_C = 2\times10^6$ stress cycles for HFMI-treated state
$\Delta\sigma_{C,red}$	reduced characteristic reference value of the fatigue resistance
$\Delta\sigma_D$, $\Delta\tau_D$	characteristic constant amplitude fatigue limit at N_D stress cycles
$\Delta\sigma_E$, $\Delta\tau_E$	fatigue action effect (stress ranges)
$\Delta\sigma_{e,2,E}$, $\Delta\tau_{e,2,E}$	equivalent stress range applied 2×10^6 stress cycles
$\Delta\sigma_{e,E}$, $\Delta\tau_{e,E}$	equivalent stress range applied $N_{max,E}$ stress cycles
$\Delta\sigma_{e,2,HFMI,E}$	equivalent stress range for HFMI treated joints, i.e. accounting for λ_{HFMI}
$\Delta\sigma_{eq,E}$	equivalent stress range for connections in webs of orthotropic decks
$\Delta\sigma_{i,E}$, $\Delta\tau_{i,E}$	stress range level applied $N_{i,E}$ stress cycles
$\Delta\sigma_L$	characteristic variable amplitude fatigue limit at N_L stress cycles
$\Delta\sigma_{max,Ed}$, $\Delta\tau_{max,Ed}$	correspond to max$\Delta\sigma_{i,Ed}$ and max$\Delta\tau_{i,Ed}$

$\Delta\sigma_s$	characteristic stress range at intersection of fatigue resistance curves for as-welded and HFMI state
ΣN_i	accumulated number of load cycles for which a fatigue action level Q_i is reached or exceeded
$\Sigma N_{i,E}$	accumulated number of stress cycles for which an applied stress range $\Delta\sigma_{i,E}$ or $\Delta\tau_{i,E}$ is reached or exceeded

Greek lower-case letters

γ_{Ff}	partial factor for applied stress ranges $\Delta\sigma_E$, $\Delta\tau_E$
γ_{Mf}	partial factor for fatigue resistance
λ_{HFMI}	supplementary damage equivalent factor to consider the mean stress effect in spectrum in case of HFMI treatment
λ_i	damage equivalent factors depending on, for example, the load situation and the structural characteristics
σ	nominal normal stress
σ_{ENS}	effective notch stress
σ_{HS}	hot spot stress
τ	nominal shear stress

4 Basis of fatigue design

(1) The fatigue design of steel structures shall be in accordance with the general rules given in EN 1990 and EN 1991 (all parts) and the specific design provisions for steel structures given in the other relevant parts of EN 1993-1 (all parts).

NOTE EN 1991 (all parts) gives provisions on fatigue actions for particular types of structures such as bridges, masts, towers, chimneys and crane supporting structures that meet these requirements. See definitions in 3.1.2.

(2) Steel structures designed according to this document shall be executed according to EN 1090-2.

(3) The methods for the verification of the fatigue design situation given in Clause 6 should follow the principle of verification by the partial factor method by comparing fatigue action effects and compatible fatigue resistances.

(4) Fatigue cracks should be either monitored in a specific inspection regime or repaired with particular care to avoid introducing more severe stress raising effects.

NOTE The action to undertake depends on the consequence of failure, see Clause 5.

(5) Fatigue tests on specimens may be carried out to determine:

- the fatigue resistance for constructional details not included in this document,
- the fatigue life of prototypes.

NOTE Prototype testing considering the design loading spectrum, in connection with a statistical evaluation of the test results according to prEN 1990:2021, Annex D, can be used to determine the characteristic fatigue life of the tested component. The actual characteristic fatigue resistance ($\Delta\sigma_C$) of the component's constructional details remains unknown.

(6) The statistical evaluation of fatigue tests should be in accordance with EN 1990.

NOTE 1 Note 2 to 8.2(1) contains detailed information on evaluation of fatigue tests.

NOTE 2 The National annex can give requirements for determining fatigue resistance from tests.

5 Fatigue design concepts

(1) The fatigue design situation should be verified using either:

a) safe life concept or
b) damage tolerant concept.

(2) The safe life concept should provide an appropriate level of reliability that the performance of a structure will not be impaired throughout its design service life without the need for regular in-service inspection or monitoring for fatigue cracks.

(3) The safe life concept should be applied in cases where local formation of cracks in one component could rapidly lead to failure of a structural element or structure.

(4) The damage tolerant concept should provide an appropriate level of reliability that the performance of a structure will not be impaired throughout its design service life, provided that readily inspectable details are used and prescribed inspection and maintenance, for detecting and preventing fatigue cracks, is implemented.

NOTE The National annex can give provisions for inspection and maintenance. The inspection intervals and methods can be based on crack growth calculations, on experience, monitoring, or previous inspection results and can be a function of the consequence of failure. Maintenance can include component replacements at given intervals. It can further give provisions for changes in inspection intervals and methods in case of monitoring or after repairing detected cracks.

(5) Constructional details, materials and stress levels should be selected for the appropriate design concept to ensure an appropriate level of reliability in accordance with EN 1990, at least equal to the reliability required for ultimate limit state verification, is achieved for:

a) safe-life concept

- at the end of the design service life;

b) damage tolerant concept

- at the end of each in-service inspection interval, so that in the event of the formation of cracks one or all of the following occurs:

  - propagation rates are low and cracks are easily detectable prior to failure,
  - multiple load paths exist,
  - crack-arresting constructional details prevent progressive damage.

NOTE The verification of the fatigue design situation includes long-term uncertainties, related to the fatigue resistance and actions, such that the possibility for fatigue cracking cannot be completely excluded but only reduced to an acceptable likelihood of occurrence.

(6) For the purpose of verification of fatigue design situation using this document, an appropriate level of reliability should be achieved by adjustment of the partial factor for fatigue resistance, γ_{Mf}, taking into account the consequences of failure and the design concept used.

NOTE 1 The values of the partial factors γ_{Mf} are given in Table 5.1 (NDP) unless the National annex gives different values.

NOTE 2 The partial factors in Table 5.1 (NDP) for low consequences satisfy the reliability requirement for class of consequences CC1 according to EN 1990, those for medium consequence satisfy CC2, and those for high consequence satisfy CC3.

NOTE 3 The partial factors in Table 5.1 (NDP) are based on the possibility to perform visual inspections.

Table 5.1 (NDP) — Recommended values of the partial factors for fatigue resistance γ_{Mf}

Design concept	Consequence of failure		
	Low consequence	Medium consequence	High consequence
Safe life	1,15	1,25	1,35
Damage tolerant	1,00	1,15	1,25

6 Fatigue design methods

6.1 Design stress methods

(1) All stress raising effects that are relevant to the fatigue design situation shall be considered in the verification of the fatigue design situation independent of the chosen design stress method.

NOTE Design stress methods are the nominal stress method, hot spot-stress method and effective notch stress method.

(2) Where stress raising effects are not included within the fatigue action effect according to a given design stress method, the stress raising effects should be accounted for within the fatigue resistance.

NOTE The different kinds of stress raising effects are explained in 3.1.1.7.

(3) The requirements expressed in (1) and (2) are satisfied by the fatigue design situation verification according to Clause 9, where the fatigue action effects are based on nominal or modified nominal stresses according to Clause 7, and the fatigue resistances according to Clause 8 are used.

NOTE 1 Annex B gives provisions on the determination of fatigue action effects and corresponding fatigue resistances according to the hot spot stress method unless the National annex specifies differently.

NOTE 2 Annex C gives provisions on the determination of fatigue action effects and corresponding fatigue resistances according to the effective notch stress method unless the National annex specifies differently.

NOTE 3 Annex F gives guidelines for the determination of fatigue action effects and corresponding fatigue resistance of constructional details treated by HFMI unless the National annex specifies differently.

6.2 Verification methods

(1) The method of verification shall be based upon calculation models that are appropriate for the fatigue design situation.

(2) For fatigue design situations where the fatigue action effect is defined by an equivalent constant stress range spectrum, with $\Delta\sigma_{e,2,Ed}$ and 2×10^6 stress cycles, the verification method according to Clause 9 should be used.

NOTE See 3.1.3.9 for equivalent constant stress range spectrum. An equivalent constant stress range spectrum is usually based on a simplified fatigue load model of EN 1991 with appropriate λ_i-values.

(3) For fatigue design situations with any other kind of stress range spectrum, the verification method of Annex A should be used.

NOTE Examples of such spectra are spectra with constant stress range but more, or less, than 2×10^6 stress cycles, see Figure 3.5 a) and b).

7 Fatigue action effect

7.1 Calculation of nominal stresses

(1) The nominal stresses from fatigue actions should be calculated using linear elastic analysis according to EN 1993-1-1.

NOTE EN 1993-1-1:2022 includes rules for:

- section properties of net area in 8.2.2.2,
- shear lag effects in 8.2.2.3,
- elastic stresses due to shear in 8.2.6(4),
- elastic stresses due to torsion in 8.2.7(3).

(2) For constructional details of steel members in composite structures, the nominal stresses should be calculated considering all effects caused by other materials in the fatigue design situation.

NOTE For steel concrete composite structures, concrete cracking under normal service conditions can affect the nominal stresses of the steel members. In these cases, actions such as the permanent actions, variable actions, shrinkage, or creep, can have an influence on the nominal stresses.

(3) Modified nominal stresses should be used for the verification where stress concentrations due to macro-geometric effects and/or concentrated load effects occur close to the potential crack location shown in the illustrations of Table 10.1 to Table 10.12 and where such effects are not included in the detail category of the considered detail according to the detail description of the tables.

(4) Class 4 cross sections may be treated as Class 3 cross sections for fatigue if the width to thickness ratios are less than the limiting proportions for Class 3 obtained from EN 1993-1-1 when ε is multiplied by $\sqrt{f_{\mathrm{y,k}} \cdot \gamma_{\mathrm{m0}} \,/\, \sigma_{\mathrm{com,f}}}$, where $\sigma_{\mathrm{com,f}}$ is the maximum design compressive stress in the part using the load combination for fatigue of EN 1990.

(5) The nominal stresses in cross sections classified as Class 4 for fatigue should be divided by the reduction factors for buckling as for the reduced stress method of EN 1993-1-5, where the plate slenderness may be determined with the maximum design compressive stress in the element determined using the effective area of the section caused by all simultaneous actions $\sigma_{\mathrm{com,f}}$.

NOTE The National annex can give limitations for class 4 sections subject to fatigue actions.

7.2 Relevant nominal stresses

(1) All nominal stresses, relevant for the constructional detail, shall be accounted for in the verification of the fatigue design situation.

(2) For each relevant nominal stress, the corresponding detail category should be determined from Table 10.1 to Table 10.12 accounting for the constructional detail, the type of stress (σ or τ) and the stress component. The supplementary requirements of the detail category on the stress calculation should be considered in addition to the provisions of 7.1.

NOTE For example, the detail category can require the stress calculation at a particular location of the constructional detail or can forbid simplifications that are allowed in EN 1993-1-1.

(3) For unwelded constructional details and for welded constructional details with weld toe failure, the relevant nominal stresses should be:

- nominal normal stresses σ in the parent metal, and
- nominal shear stresses τ in the parent metal.

(4) For weld root failure of load-carrying partial penetration or fillet welds, the forces transmitted by a unit length of weld should be resolved into components transverse and parallel to the longitudinal axis of the weld.

(5) The relevant nominal stresses in the weld throat should be taken as, see Figure 7.1:

- normal stresses σ_{wf} transverse to the axis of the weld, and
- shear stresses τ_{wf} longitudinal to the axis of the weld.

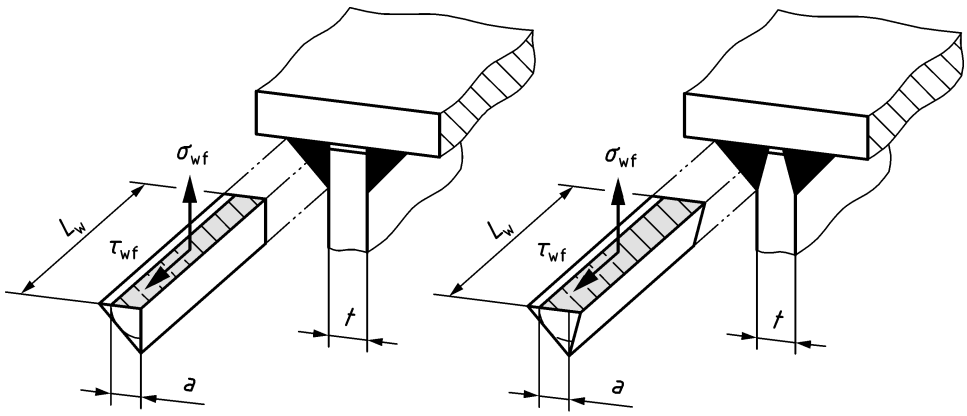

a) b)

Figure 7.1 — Relevant stresses in (a) fillet welds and (b) partial penetration welds

(6) The nominal stresses σ_{wf} and τ_{wf} should be obtained by dividing the relevant component of the force transmitted per unit length of weld by the throat size a, see Figure 7.1.

(7) The stress components $\sigma_{\perp}$ and $\tau_{\perp}$ on the throat section (see Figure 7.2), determined by the directional approach according to EN 1993-1-8 due to a force F transverse to the axis of the weld, may be transferred into the nominal stress component σ_{wf} of the weld by:

$$\sigma_{wf} = \sqrt{\sigma_{\perp}^2 + \tau_{\perp}^2} \tag{7.1}$$

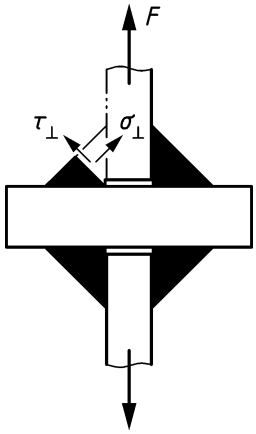

Figure 7.2 — Stresses on the throat section of fillet welds according to EN 1993-1-8

(8) The stress component $\tau_{||}$ on the throat section, determined by the directional approach according to EN 1993-1-8 due to a shear force parallel to the axis of the weld, should be the nominal shear stress component τ_{wf}.

(9) The stress component $\sigma_{||}$ parallel to the axis of the weld may be neglected for weld root failure.

(10) The relevant weld stress in double fillet welds due to transverse bending of the plate may be calculated using:

$$\sigma_{\mathrm{wf}} = \frac{M}{a\,L_w\,(a+t)} \tag{7.2}$$

where:

t is the plate thickness under bending

a is the throat size of the weld

M is the bending moment

L_{w} is the weld length according to Figure 7.3

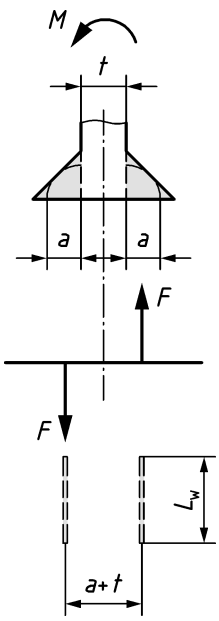

Figure 7.3 — Relevant stresses in double fillet welds due to transverse bending

(11) For bolted joints or joints with rods with rolled or cut threads, the relevant nominal stresses should be:

- nominal normal stresses $\sigma = \frac{F_B}{A_s}$ (7.3)
- nominal shear stress on shank $\tau = \frac{V_B}{A}$ (7.4)

where:

A is the area of the shank of the bolt or rod

A_s is the stress area of the bolt or rod

F_B is the force acting on the bolt or rod

V_B is the shear force per shear plane acting on the bolt or rod

NOTE For joints with preloaded bolts or rods:

– F_B can be determined according to Annex E,

– V_B can be disregarded.

(12) Prying and/or bending effects in bolted joints or joints with rods should be accounted for when determining the force F_B. Effects due to imperfections in the bolt or rod may be neglected.

(13) Prying and/or bending effects on the stress in the bolt may be neglected in simple and symmetric joints with preloaded bolts such as the T-stub in prEN 1993-1-8:2021, Table 6.2, where plates are either in full contact and have sufficient stiffness, or are without tip contact after assembly.

7.3 Calculation of nominal stress ranges

7.3.1 General

(1) Nominal stress ranges in relevant parts of constructional details should be determined at the locations indicated in the details shown in Table 10.1 to Table 10.12.

(2) Effective nominal stress ranges may be considered in the verification of non-welded or thermally stress-relieved welded constructional details in partial or total compression or in cases with partial or total compression confirmed by modelling or measurements.

NOTE See 7.4 for effective nominal stress ranges.

7.3.2 Design value of nominal stress range

(1) For fatigue design situations where the fatigue action effect is defined by an equivalent constant stress range, the design value of the nominal stress ranges $\Delta\sigma_{e,2,Ed}$ and $\Delta\tau_{e,2,Ed}$ should be determined as follows:

$$\Delta\sigma_{e,2,Ed} = \lambda_1 \lambda_2 \ldots \lambda_n \Delta\sigma_E(\gamma_{Ff} Q_{fat})$$
$$\Delta\tau_{,e,2,Ed} = \lambda_1 \lambda_2 \ldots \lambda_n \Delta\tau_E(\gamma_{Ff} Q_{fat}) \quad (7.5)$$

where

λ_i are damage equivalent factors depending on, for example, the load situation and the structural characteristics

(2) For fatigue design situations where the fatigue action effect is defined by an equivalent constant stress range, the design value of the modified nominal stress ranges $\Delta\sigma_{e,2,Ed}$ and $\Delta\tau_{e,2,Ed}$ should be determined as follows:

$$\Delta\sigma_{e,2,Ed} = k_f\,\lambda_1\,\lambda_2 \ldots \lambda_n\,\Delta\sigma_E(\gamma_{Ff}\,Q_{fat})$$
$$\Delta\tau_{e,2,Ed} = k_f\,\lambda_1\,\lambda_2 \ldots \lambda_n\,\Delta\tau_E(\gamma_{Ff}\,Q_{fat}) \qquad (7.6)$$

where

k_f is the stress concentration factor to take account of concentrated load and/or macro-geometric effects not included in the detail category

NOTE 1 See Figure 3.1 for examples of stress concentrations.

NOTE 2 Stress concentration factors k_f can be obtained from handbooks or from finite element calculations. Annex D gives stress concentration factors k_f for specific cases.

(3) For welded joints of hollow sections in lattice girders the design value of the modified nominal stress range $\Delta\sigma_{e,2,Ed}$ should be determined as follows using the simplified model in Annex D.3 unless more accurate calculations are carried out:

$$\Delta\sigma_{e,2,Ed} = k_1\,\Delta\sigma^{**}_{e,2,Ed} \qquad (7.7)$$

where:

k_1 is the stress concentration factor according to Table D.1 and Table D.2

$\Delta\sigma^{**}_{e,2,Ed}$ is the design value of the stress range caused by the simplified fatigue load model specified in EN 1991 calculated for a simplified truss model with continuous chords and pinned braces

(4) For load models other than those resulting in an equivalent constant stress range, the design value of the stress ranges $\Delta\sigma_{i,E}$ and $\Delta\tau_{i,E}$ should be determined using Annex A.

7.4 Effective design value of stress range

(1) In non-welded details, or welded details which have been subjected to full thermal stress relief after all welding operations have been completed, the mean stress level influence on the fatigue life may be taken into account by considering a reduced design value of each stress cycle in the design spectrum where part, or all, of the stress cycle is compressive.

(2) The mean stress level according to (1) should be confirmed by modelling or measurements including the serviceability stresses due to the permanent action and the most tensile stress resulting from the fatigue action.

(3) The effective design value of the stress range $\Delta\sigma$ may be calculated by adding the tensile portion of the stress range (if any) to 60% of the magnitude of the compressive portion of the stress range (if any) as follows, see Figure 7.4:

- if the entire stress range is in tension as in Figure 7.4 a): $\Delta\sigma = \sigma_{max} - \sigma_{min}$
- if a part of the stress range is in compression as in Figure 7.4 b): $\Delta\sigma = \sigma_{max} - 0{,}6\,\sigma_{min}$ (7.9)
- if the entire stress range is in compression as in Figure 7.4 c): $\Delta\sigma = 0{,}6\,\sigma_{max} - 0{,}6\,\sigma_{min}$

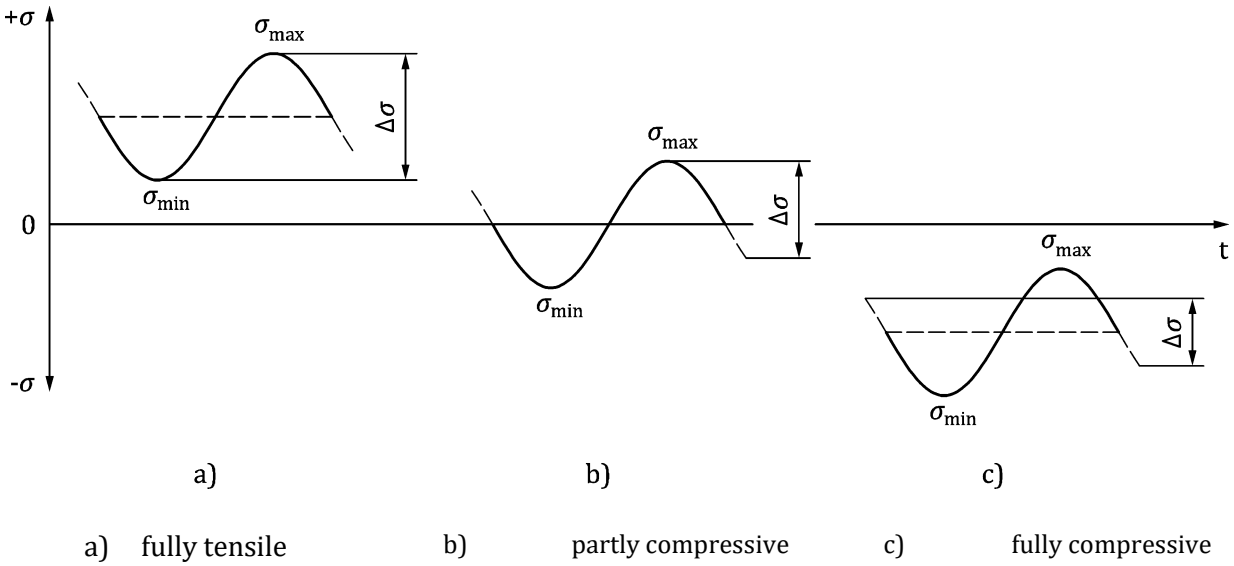

a) fully tensile b) partly compressive c) fully compressive

NOTE Tension stresses are positive.

Figure 7.4 — Effective design value of stress range for non-welded or stress relieved details

8 Fatigue resistance

8.1 Fatigue resistance curves

(1) The fatigue resistance of constructional details should be calculated based on applicable fatigue resistance curves.

NOTE 1 The characteristic fatigue resistance is represented by a series of parallel and equally spaced fatigue resistance curves defining the number of cycles, N_R (endurance), that a stress range $\Delta\sigma$ or $\Delta\tau$ can withstand until failure occurs, as shown in Figures 8.1 to 8.4.

NOTE 2 The fatigue resistance curves are attributed to detail categories. Each detail category is designated by a number which represents the characteristic reference value $\Delta\sigma_C$ or $\Delta\tau_C$ in N/mm² for the fatigue resistance at $N_C = 2\times10^6$ cycles.

NOTE 3 For constant amplitude loading, the fatigue resistance curves consist of a finite life region expressed by a linear relationship with slope parameter m_1 and an infinite life region expressed by a constant relationship on logarithmic scales. The transition between both regions is defined by the constant amplitude fatigue limit $\Delta\sigma_D$ or $\Delta\tau_D$.

NOTE 4 For variable amplitude loading under normal stresses, the finite life region of the fatigue resistance curves extends beyond $\Delta\sigma_D$ to the variable amplitude fatigue limit $\Delta\sigma_L$ by a linear relationship with slope parameter m_2 on logarithmic scales.

(2) The fatigue resistance curves of Figure 8.1a should be applied for non-welded constructional details with light notch effect subject to $\Delta\sigma$ including:

- plain members free from welding in Table 10.1;
- bolted details in Table 10.2 with holes drilled or reamed.

NOTE See also Table 8.1.

(3) The fatigue resistance curves of Figure 8.1b should be applied for non-welded constructional details with sharp notch effect subject to $\Delta\sigma$ including:

- bolted details in Table 10.2 with holes thermally cut and punched without subsequent reaming;
- bolt detail ⑥ in Table 10.2.

NOTE See also Table 8.1.

(4) The fatigue resistance curves of Figure 8.2 should be applied for welded constructional details with sharp notch effect subject to $\Delta\sigma$ including Table 10.3 to Table 10.11 except for Table 10.8.

NOTE See also Table 8.1.

(5) The fatigue resistance curves of Figure 8.3 should be applied for hollow section joint details in Table 10.8 subject to $\Delta\sigma$.

NOTE See also Table 8.1.

(6) The fatigue resistance curves of Figure 8.4 should be applied for constructional details subject to $\Delta\tau$ including:

- non-welded details ⑥, ⑦, ⑧ in Table 10.1;
- bolt detail ⑦ in Table 10.2;
- welded constructional detail ⑩ in Table 10.6.

NOTE See also Table 8.2.

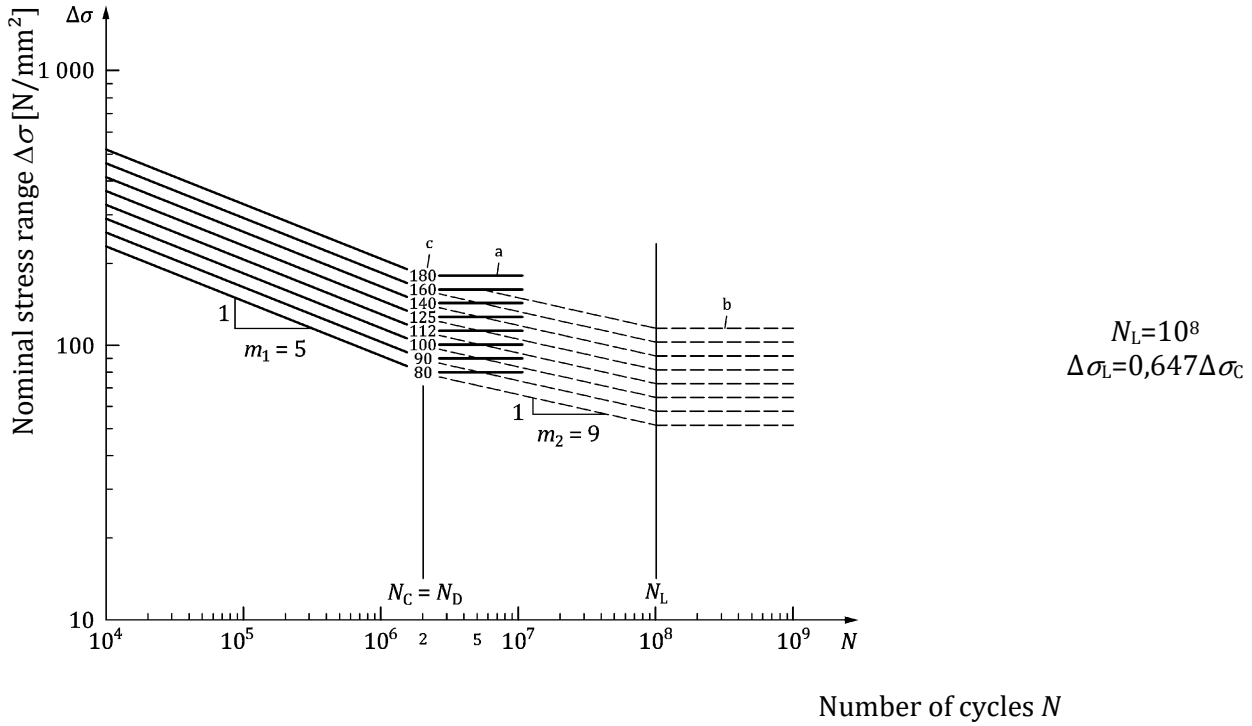

(a) light notch effect

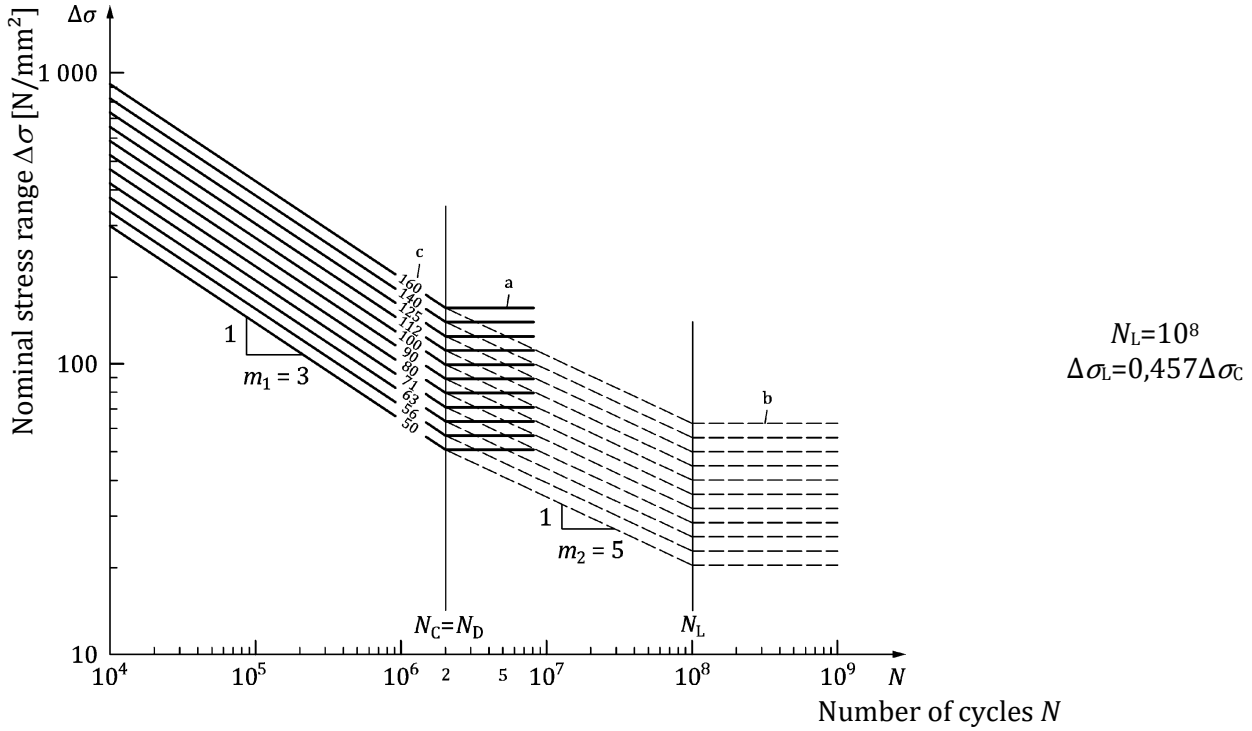

(b) sharp notch effect

Key

a – Fatigue resistance curve for constant amplitude loading
b – Extended fatigue resistance curve for variable amplitude loading
c – Detail category

Figure 8.1 — Characteristic fatigue resistance curves of non-welded constructional details subject to nominal normal stress ranges

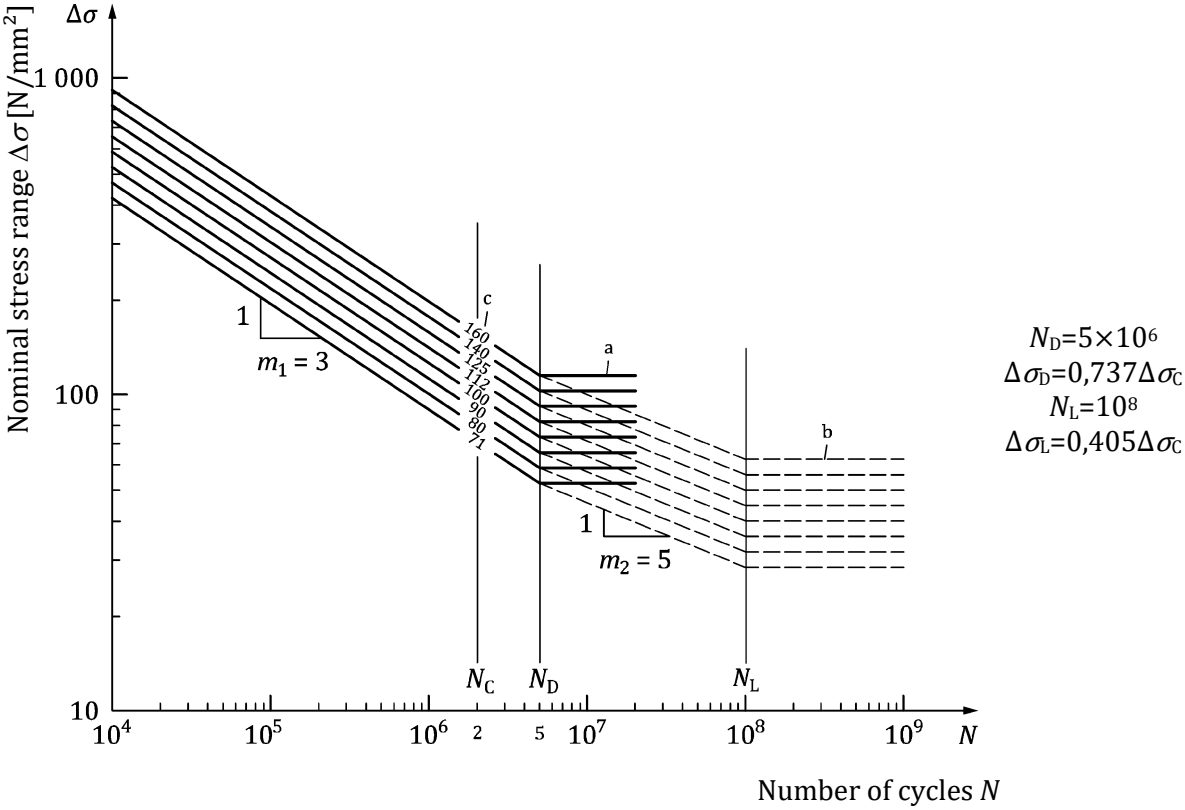

(a) Detail category 71 and above

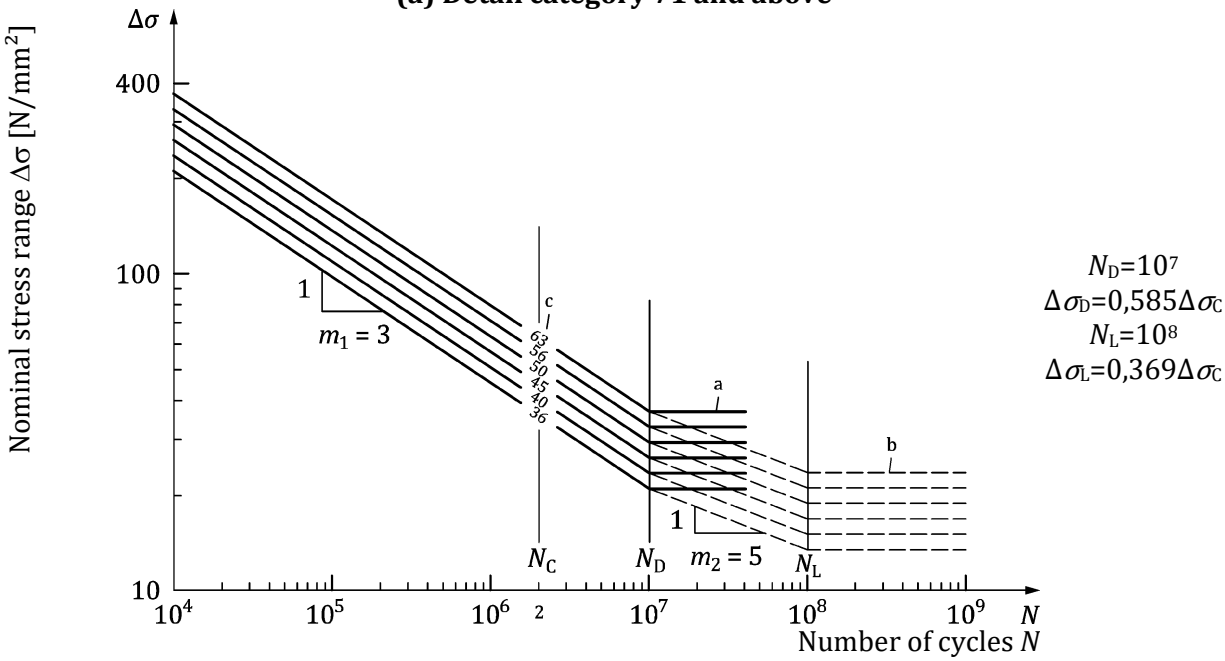

(b) Detail category below 71

Key

a – Fatigue resistance curve for constant amplitude loading
b – Extended fatigue resistance curve for variable amplitude loading
c – Detail category

NOTE See explanations and symbols in Figure 8.1.

Figure 8.2 — Characteristic fatigue resistance curves of welded constructional details with sharp notch effect subject to nominal normal stress ranges

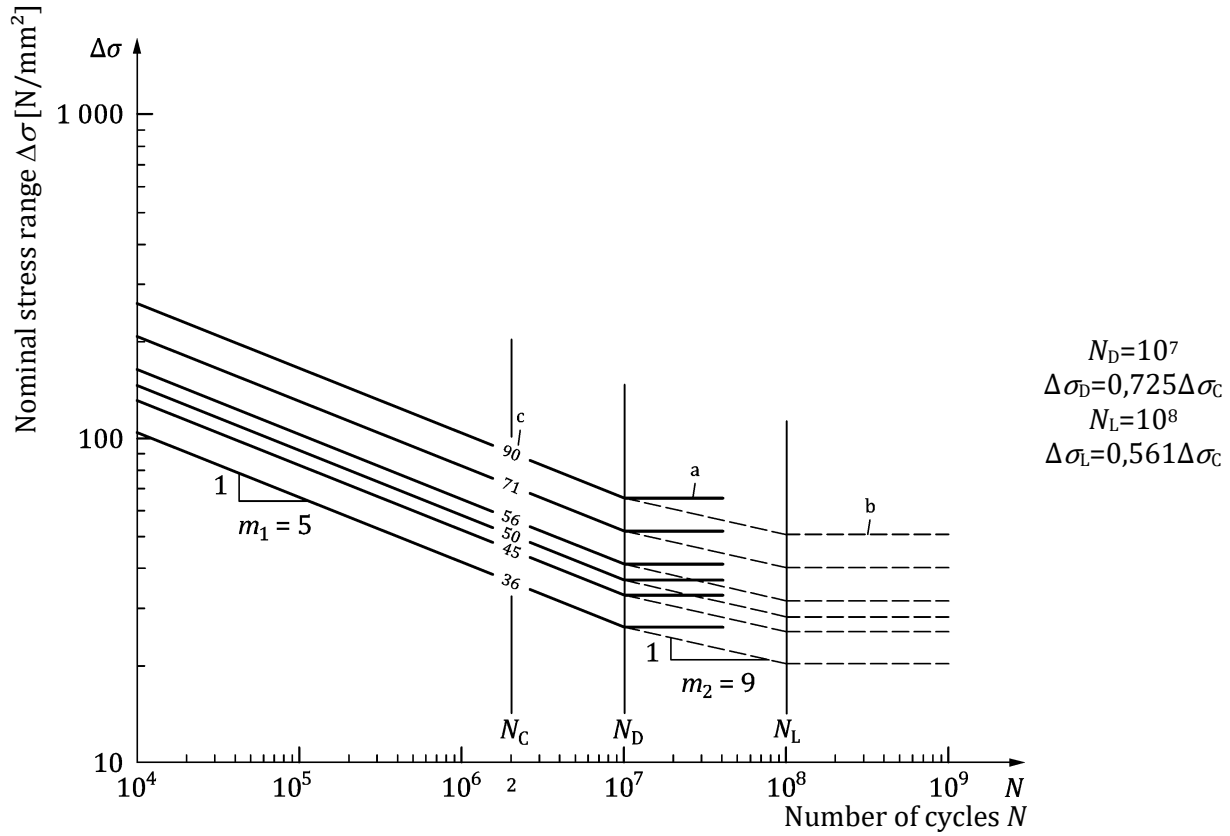

NOTE See explanations and symbols in Figure 8.1.

Figure 8.3 — Characteristic fatigue resistance curves of lattice girder joints made of hollow sections according to Table 10.8 subject to nominal normal stress ranges

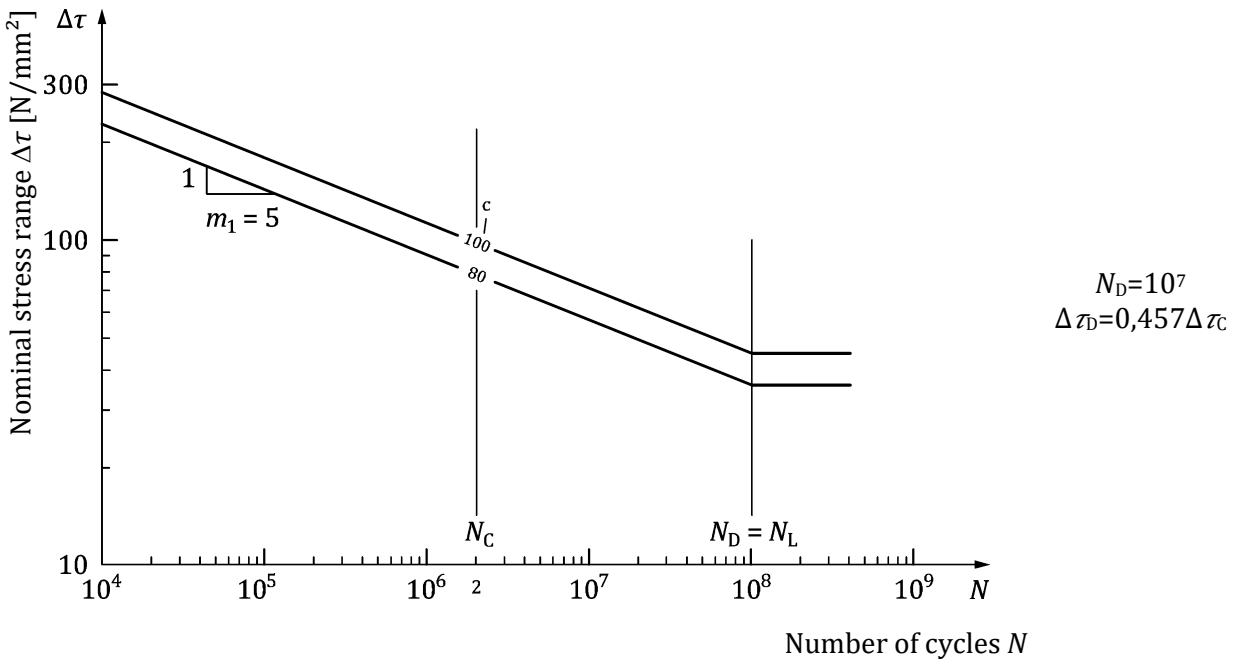

NOTE See explanations and symbols in Figure 8.1.

Figure 8.4 — Characteristic fatigue resistance curves of constructional details subject to nominal shear stress ranges

Table 8.1 — Characteristic fatigue resistance values in N/mm² from curves in Figures 8.1 to 8.3

Figure	Detail category	Slope parameter		$\Delta\sigma_D$ [N/mm²]	$\Delta\sigma_L$ [N/mm²]
		m_1	m_2		
8.1a	180	5	9	180	117
	160			160	104
	140			140	90,6
	125			125	80,9
	112			112	72,5
	100			100	64,7
	90			90,0	58,2
	80			80,0	51,8
8.1b	112	3	5	112	51,2
	100			100	45,7
	90			90,0	41,1
	80			80,0	36,6
	71			71,0	32,4
	63			63,0	28,8
	56			56,0	25,6
	50			50,0	22,9
8.2a	160	3	5	118	64,8
	140			103	56,7
	125			92,1	50,6
	112			82,5	45,4
	100			73,7	40,5
	90			66,3	36,5
	80			59,0	32,4
	71			52,3	28,8
8.2b	63	3	5	36,9	23,2
	56			32,8	20,7
	50			29,3	18,5
	45			26,3	16,6
	40			23,4	14,8
	36			21,1	13,3
8.3	90	5	9	65,3	50,5
	71			51,5	39,8
	56			40,6	31,4
	50			36,3	28,1
	45			32,6	25,2
	36			26,1	20,2

Table 8.2 — Characteristic fatigue resistance values in N/mm² from curves in Figure 8.4

Figure	Detail category	Slope parameter		$\Delta\tau_D$ [N/mm²]	$\Delta\tau_L$ [N/mm²]
8.4	100	5	–	45,7	45,7
	80			36,6	36,6

8.2 Classification of constructional details

(1) For the nominal stress method, the detail categories $\Delta\sigma_C$ and $\Delta\tau_C$ should be used in accordance with Clause 10:

- Table 10.1 for plain members free from welding,
- Table 10.2 for mechanically fastened joints,
- Table 10.3 for welded built-up sections and longitudinal welds,
- Table 10.4 for transverse butt welds (full penetration),
- Table 10.5 for weld attachments and stiffeners,
- Table 10.6 for load carrying welded joints,
- Table 10.7 for hollow section joints,
- Table 10.8 for lattice girder joints made of hollow sections,
- Table 10.9 for orthotropic decks – closed stiffeners,
- Table 10.10 for orthotropic decks – open stiffeners,
- Table 10.11 for crane runway beams,
- Table 10.12 for chimneys, masts and towers.

NOTE 1 Tables 10.1 to 10.12 describe the constructional details together with the stress distribution in the vicinity of the site of the potential crack location that corresponds with the detail category.

NOTE 2 Where test data has been used to determine the detail category for a particular constructional detail, the stress range $\Delta\sigma_C$ or $\Delta\tau_C$ corresponding to $N_C = 2\times10^6$ cycles has been calculated using a lower prediction bound of survival for log N with 95% probability, taking into account the standard deviation and the sample size. The number of data points (not lower than 12) has been considered in the statistical analysis. Accounting for pre-existing information on the slope parameter of the fatigue resistance curves, the aforementioned approach to determine the stress range $\Delta\sigma_C$ or $\Delta\tau_C$ is identical with prEN 1990:2021, Annex D in respect of the statistical determination of a single property.

NOTE 3 The test data used to determine detail categories includes detail specific properties such as residual stress effects.

NOTE 4 The National annex can permit the determination of a more appropriate detail category for a particular application based on tests according to 4(5) and (6) provided that the test data is statistically evaluated in accordance with NOTE 2.

NOTE 5 The National annex can give detail categories $\Delta\sigma_C$ or $\Delta\tau_C$ for details not classified by Table 10.1 to Table 10.12.

(2) For the application of Tables 10.1 to 10.12, Annexes B, C and F, weld quality level B according to EN ISO 5817 (assuming execution class EXC3 or higher), assignment of qualified personnel and an extent of non-destructive testing (NDT) as specified by EN 1090-2 should be implemented. Additionally, the supplementary requirements described by the detail category tables in Clause 10 should be met.

NOTE For structures and components in execution class EXC2, weld quality level C can be sufficient.

8.3 Fatigue resistance modifications

8.3.1 Size effect

(1) The size effect due to thickness or other dimensional effects should be taken into account as required in Tables 10.1 to 10.12. The fatigue resistance, considering size effect, should be determined as follows:

$$\Delta\sigma_C = k_s \Delta\sigma_{C,Table} \tag{8.1}$$

where:

$\Delta\sigma_{C,Table}$ is the value of the considered detail category provided in the first column of table in Clause 10

k_s is the parameter size effect specified in the tables of Clause 10

NOTE For some constructional details, the size effect is already taken into account by specifying different detail categories.

(2) In case $\Delta\sigma_C$ according to (1) is smaller than 71 N/mm^2, but $\Delta\sigma_{C,Table}$ is greater than 71 N/mm^2, $\Delta\sigma_D$ shall remain as 0,737 $\Delta\sigma_C$.

8.3.2 Post-fabrication treatment

(1) The effect of a post-fabrication treatment on fatigue resistance may be taken into account.

NOTE 1 The National annex can give provisions for post-fabrication treatments including post weld treatments such as toe grinding, TIG re-melting of weld toe region, hammer peening, HFMI treatment and shot peening.

NOTE 2 Guidance is given in Annex F regarding fatigue design of welded joints subject to High Frequency Mechanical Impact Treatment (HFMI treatment).

(2) The effect of a post fabrication treatment other than grinding should not be combined with the beneficial effect of full thermal stress relief according to 7.4(3).

9 Fatigue verification

9.1 Verification with respect to elastic behaviour

(1) The nominal stresses σ_{Ed} and τ_{Ed} resulting from the characteristic combination of actions according to EN 1990, making due allowance where relevant for the macro-geometric and/or concentrated load effects, should be limited as follows:

$$\sigma_{\mathrm{Ed}} \leq f_{\mathrm{y}}/\gamma_{\mathrm{M,ser}} \tag{9.1}$$

and

$$\tau_{\mathrm{Ed}} \leq \frac{f_{\mathrm{y}}}{\gamma_{\mathrm{M,ser}}\sqrt{3}} \tag{9.2}$$

NOTE 1 Elastic behaviour is a necessary condition for all stress-based verification methods of this document including Annexes A, B, C and F.

NOTE 2 The numerical value for $\gamma_{\mathrm{M,ser}}$ is set to 1,0 unless a different value is specified by the National annex.

(2) In order to avoid low cycle fatigue, the maximum nominal stresses ranges $\Delta\sigma_{\mathrm{max,Ed}}$ and $\Delta\tau_{\mathrm{max,Ed}}$ resulting from the frequent combination of actions according to EN 1990 and calculated according to Clause 7, making due allowance where relevant for the macro-geometric and/or concentrated load effects, should be limited as follows:

$$\Delta\sigma_{\mathrm{max,Ed}} \leq 1{,}5 f_{\mathrm{y}}/\gamma_{\mathrm{Mf}} \tag{9.3}$$

and

$$\Delta\tau_{\mathrm{max,Ed}} \leq 1{,}5\frac{f_{\mathrm{y}}}{\gamma_{\mathrm{Mf}}\sqrt{3}} \tag{9.4}$$

NOTE High nominal stress ranges can lead to plastic deformation at the spots of stress concentration. As a consequence, alternating plastic deformations can be induced in cases of reversed loading that need to belimited to avoid low cycle fatigue.

(3) Where the actual stress range spectrum is replaced by an equivalent constant stress range $\Delta\sigma_{\mathrm{e,2,Ed}}$ or $\Delta\tau_{\mathrm{e,2,Ed}}$ according to EN 1991, the requirement of (2) may be assumed to be fulfilled.

9.2 Verification with respect to reference value

(1) This verification should be performed for design situations with unknown maximum stress range $\Delta\sigma_{\mathrm{max,Ed}}$ or $\Delta\tau_{\mathrm{max,Ed}}$.

NOTE Design situations with unknown maximum stress range can be:

- The variable amplitude stress range spectrum is replaced by the equivalent constant stress range $\Delta\sigma_{\mathrm{e,2,Ed}}$ or $\Delta\tau_{\mathrm{e,2,Ed}}$.
- The variable amplitude stress range spectrum is calculated using a simplified fatigue load model according to EN 1991 that neglects the largest load cycles with very low frequencies.

(2) The normal and shear stress ranges for constructional details should satisfy the following relationships:

$$\frac{\Delta\sigma_{\mathrm{e,2,Ed}}}{\Delta\sigma_{\mathrm{C}}/\gamma_{\mathrm{Mf}}} \leq 1{,}0 \tag{9.5}$$

and

$$\frac{\Delta\tau_{\mathrm{e,2,Ed}}}{\Delta\tau_{\mathrm{C}}/\gamma_{\mathrm{Mf}}} \leq 1{,}0 \tag{9.6}$$

NOTE The stress components to be considered for a particular constructional detail, see 7.2, are indicated by Tables 10.1 to 10.12. See also 7.3.

9.3 Verification with respect to fatigue limit

(1) This verification may be performed for design situations with known maximum stress range $\Delta\sigma_{\mathrm{max,Ed}}$ or $\Delta\tau_{\mathrm{max,Ed}}$.

NOTE See note to 9.2(1).

(2) An infinite life for constructional details may be assumed if the maximum stress range of the applied normal or shear stress spectrum satisfy the following relationships:

$$\frac{\Delta\sigma_{\mathrm{max,Ed}}}{\Delta\sigma_{\mathrm{D}}/\gamma_{\mathrm{Mf}}} \leq 1{,}0 \tag{9.7}$$

or

$$\frac{\Delta\tau_{\mathrm{max,Ed}}}{\Delta\tau_{\mathrm{D}}/\gamma_{\mathrm{Mf}}} \leq 1{,}0 \tag{9.8}$$

9.4 Verification for multiaxial fatigue

(1) If the considered location of a constructional detail (see cracks indicated in Table 10.1 to Table 10.12) is subject to a combination of normal and shear stresses, the fatigue verification should consider their combined effects as follows:

a) If the normal and shear stresses simultaneously occur during each loading event, the principal stresses should be considered and the corresponding stress range should be verified according to Formula (9.5);
b) If the normal and shear stresses do not simultaneously occur during each loading event, the components of damage should be added according to Miner's summation:

- for failure in parent metal (including crack initiation at weld toes) subjected to nominal normal stress ranges $\Delta\sigma_{\mathrm{x}}$, $\Delta\sigma_{\mathrm{y}}$, $\Delta\sigma_{\mathrm{z}}$ and nominal shear stress ranges $\Delta\tau_{\mathrm{xy}}$, $\Delta\tau_{\mathrm{xz}}$, $\Delta\tau_{\mathrm{yz}}$:

$$\sum_{j=\mathrm{x,y,z}} \left(\frac{\Delta\sigma_{j,\mathrm{e,2,Ed}}}{\Delta\sigma_{j,\mathrm{C}}/\gamma_{\mathrm{Mf}}}\right)^{m_\sigma} + \sum_{k=\mathrm{xy,xz,yz}} \left(\frac{\Delta\tau_{k,\mathrm{e,2,Ed}}}{\Delta\tau_{k,\mathrm{C}}/\gamma_{\mathrm{Mf}}}\right)^{m_\tau} \leq 1{,}0 \tag{9.9}$$

- for weld failure (crack initiation at weld root) due to weld stresses according to 7.2(5):

$$\left(\frac{\Delta\sigma_{\mathrm{wf,e,2,Ed}}}{\Delta\sigma_{\mathrm{wf,C}}/\gamma_{\mathrm{Mf}}}\right)^{m_\sigma} + \left(\frac{\Delta\tau_{\mathrm{wf,e,2,Ed}}}{\Delta\tau_{\mathrm{wf,C}}/\gamma_{\mathrm{Mf}}}\right)^{m_\tau} \leq 1{,}0 \tag{9.10}$$

where:

m_σ is the first slope parameter m_1 of the fatigue resistance curve for the considered constructional detail under normal stress loading

m_τ is the first slope parameter m_1 of the fatigue resistance curve for the considered constructional detail under shear stress loading

(2) If normal and shear stresses cause the formation of fatigue cracks at different locations, a separate fatigue verification for both locations should be performed.

(3) Where no data for $\Delta\sigma_{\mathrm{e,2,Ed}}$ or $\Delta\tau_{\mathrm{e,2,Ed}}$ is available the verification format in Annex A may be used.

NOTE The National annex can give information on the use of Annex A.

10 Classified constructional details for the nominal stress method

(1) The classifications contained in Tables 10.1 to 10.12 should be used for the nominal, or modified nominal, stress method only.

NOTE 1 The weld symbols used in Tables 10.3 to 10.12 are explained by Table 10.13.

NOTE 2 The last column of Tables 10.1 to 10.11 can contain supplementary requirements beyond the provisions of EN 1090-2, EN 1993-1-1 and EN 1993-1-8.

(2) In situations where non uniform stress distributions may be caused by global and/or local bending, the stresses at the potential crack location should be considered.

NOTE The illustrations of the constructional details subject to normal stress generally show the distribution of the stress σ at the mid-plane of the member as a result of normal forces.

(3) The classifications of fillet welded details may be applied to convex, concave or flat fillet welds, although the illustrations only show one indicative fillet weld type.

(4) For $N < 2\times10^6$, fatigue verification should consider whether constructional details of plain members adjacent to joints have a lower fatigue resistance.

NOTE Due to the different slopes of details in plain members, mechanically fastened joints and welded joints, the plain members can have a relatively lower fatigue resistance for $N < 2\times10^6$ (intersection of fatigue resistance curves).

(5) For structures with hot dip galvanizing, the particular provisions in Tables 10.1, 10.2, 10.4, 10.6, 10.9 and 10.11 should be applied.

NOTE 1 Regarding the particular provisions, for the use of the next lower detail categories as required by the footnotes in Tables 10.1, 10,2, 10.4, 10.6, 10.9 and 10.11, see 8.1(2), 8.1(3) and 8.1(6).

NOTE 2 These provisions do not apply to thermal sprayed zinc/aluminium details.

(6) For structures made of weathering steels, the particular provisions in Tables 10.1 and 10.2 should be applied.

NOTE Regarding the particular provisions, for the use of the next lower detail categories as required by the footnotes in Tables 10.1 and 10.2, see 8.1(2) and 8.1(3).

Table 10.1 — Plain members

Detail category	Constructional detail	Description	Supplementary Requirements	
180 $m_1 = 5$	① 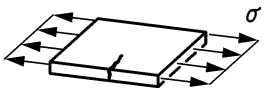	Rolled or extruded products subject to normal stress: ① plates and flats with as rolled edges; ② rolled sections with as rolled edges; ③ seamless hollow sections, either rectangular or circular	①, ③: Defects, sharp edges and rolling flaws should be removed by grinding until a smooth transition is achieved with mean surface roughness depth in the order of mill scale (Rz ≤ 200 µm). Repair by welding not allowed, requiring following technical delivery conditions: ①: Class A3 acc. to EN 10163-2. ③: Option 1.5 acc. to EN 10210	
160 $m_1 = 5$	② 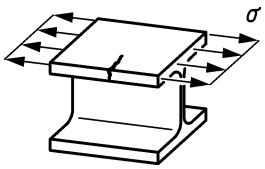		①, ②, ③: Defects, sharp edges and rolling flaws should be removed by grinding until a smooth transition is achieved. Repair by welding not allowed, requiring following technical delivery conditions: ①: Class A3 acc. to EN 10163-2. ②: Class C3 acc. to EN 10163-3. ③: Option 1.5 acc. to EN 10210	
125 $m_1 = 5$	③ 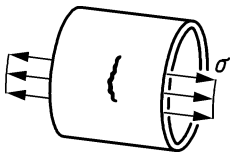		①, ②, ③: Defects, sharp edges and rolling flaws should be removed by grinding until a smooth transition is achieved. Repair by welding should be followed by grinding until a smooth transition is achieved.	
160 $m_1 = 5$	④ 	Sheared or thermally cut material subject to normal stress: ④ with subsequent grinding; ⑤ with subsequent deburring	Stress concentrations due to macro-geometric effects should be accounted for. Δσ should be calculated using net section including appropriate stress concentration factors.	④ Mean surface roughness depth after grinding in the order of mill scale (Rz ≤ 200 µm). Repair by welding not allowed.
125 $m_1 = 5$	⑤ 			⑤ Thermal cut quality acc. to EN 9013 with mean surface profile range 2. Repair by welding followed by grinding until a smooth transition is achieved.
100 $m_1 = 5$	⑥  ⑦ 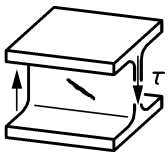 ⑧ 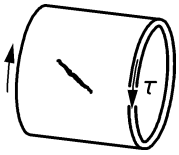	Rolled or extruded products subject to shear stress: ⑥ to ⑧ same description as for ① to ③	For shear loads in webs of any section class, Formula (8.25) of EN 1993-1-1 should be used to calculate Δτ.	⑥, ⑦ and ⑧: Requirements as for ① to ③ in detail category 125.
For ① to ⑧ made of weathering steel the next lower detail category of Figure 8.1 should be used, but not higher than Detail Category 140. For ① to ⑧ with hot dip galvanizing the next lower detail category of Figure 8.1 should be used, but not higher than Detail Category 140.				

Table 10.2 — Mechanically fastened joints

Detail category	Constructional detail	Description		Supplementary Requirements
112 $m_1 = 5$	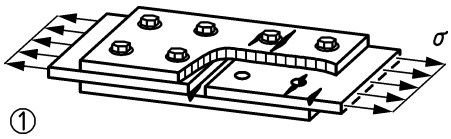	① Double covered symmetrical joint subject to normal stress with preloaded high strength bolts or preloaded injection bolts		$\Delta\sigma$ should be calculated for all members containing a potential crack site using the gross cross-section.
90 $m_1 = 5$	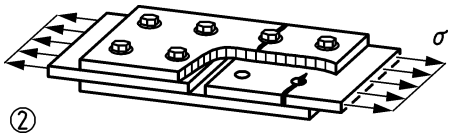	② Double covered symmetrical joint subject to normal stress		For all members containing a potential crack site, $\Delta\sigma$ should be calculated with $\Delta\sigma = \Delta\sigma_{\text{net}}\left[a + \left(b - c\frac{d_0}{w}\right)^3\right]$ where σ_{net} is the net cross-section stress. For fitted bolts and non-preloaded injection bolts: 1 bolt row: $a = 1$; $b = 1{,}6$; $c = 2{,}7$ 2 bolt rows: $a = 1$; $b = 1{,}3$; $c = 2{,}2$ ≥ 3 bolt rows: $a = 1$; $b = 1{,}1$; $c = 1{,}8$ For non-preloaded normal bolts in holes with normal clearance: $a = 1$; $b = 1{,}6$; $c = 2{,}7$ See note at the end of table for dimensions d_0 and w. The bolts should be checked using ⑦.
		with fitted bolts or non-preloaded injection bolts	Holes drilled or reamed	
		with non-preloaded normal bolts in holes with normal clearance without load reversal		
71 $m_1 = 3$		with fitted bolts or non-preloaded injection bolts	Holes thermally cut or punched	
		with non-preloaded normal bolts in holes with normal clearance without load reversal		
100 $m_1 = 5$	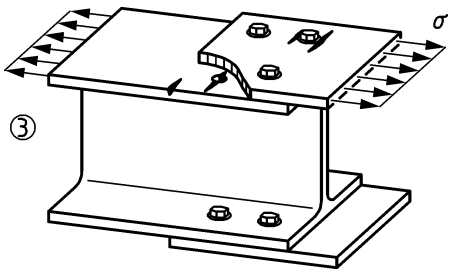	③ One-sided fully supported connection subject to normal stress with preloaded high strength bolts or preloaded injection bolts		$\Delta\sigma$ should be calculated for all members containing a potential crack site using the gross cross-section. One-sided unsupported connections should be avoided or the effect of eccentricity should be taken into account in the stress calculation.
80 $m_1 = 5$	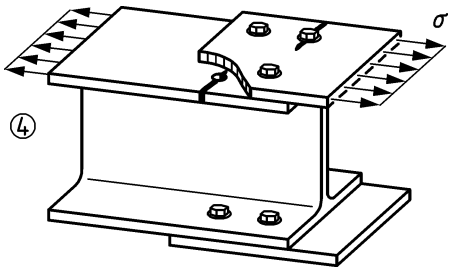	④ One-sided fully supported connection subject to normal stress		For all members containing a potential crack site, $\Delta\sigma$ should be calculated as for ②. The bolts should be checked using ⑦. One-sided unsupported connections should be avoided or the effect of eccentricity should be taken into account in the stress calculation.
		with fitted bolts or non-preloaded injection bolts	Holes drilled or reamed	
		with non-preloaded normal bolts in holes with normal clearance without load reversal		
56 $m_1 = 3$		with fitted bolts or non-preloaded injection bolts	Holes thermally cut or punched	
		with non-preloaded normal bolts in holes with normal clearance without load reversal		

Detail category	Constructional detail		Description	Supplementary Requirements
90 $m_1 = 5$	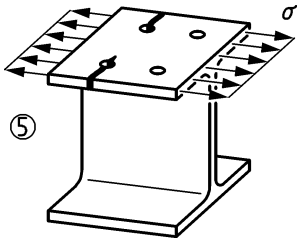		⑤ Structural element subject to normal stress with drilled or reamed round holes	$\Delta\sigma$ should be calculated using net cross-section.
50 $m_1 = 3$			as aforementioned, but with thermally cut or punched round holes	
71 $m_1 = 3$	Size effect for $d > 30$ mm. $k_s = (30/d)^{0,25}$ where d is the nominal bolt diameter in mm.	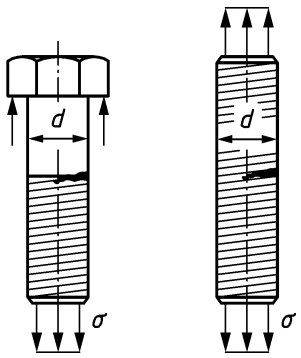	⑥ Black bolts and rods subject to normal stress with normal metric screw threads rolled after heat treatment	$\Delta\sigma$ should be calculated using the tensile stress area of the bolt or rod according to EN 1993-1-8, see 5.7. See Annex E for preloaded bolts and rods.
56 $m_1 = 3$			as aforementioned, but rolled before heat treatment	
50 $m_1 = 3$			as aforementioned, but hot-dip or electric galvanized after rolling	
50 $m_1 = 3$			as aforementioned, but with cut threads	
100 $m_1 = 5$	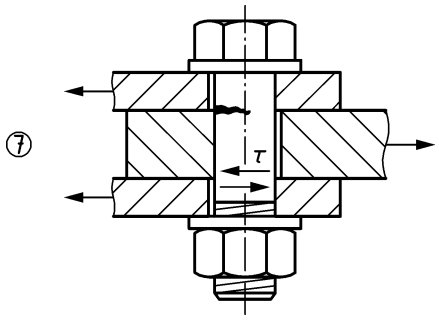		⑦ Fitted bolts subject to single or double shear	Carbon steel bolts should be of Grade 5.6, 5.8, 6.8, 8.8 or 10.9 acc. to EN 1993-1-8. Stainless steel bolts should have nominal values of yield strength and ultimate tensile strength equal to or higher than those of Grade 70 according to EN 1993-1-4. Thread should not be in shear plane(s). $\Delta\tau$ should be calculated using the shank area of the bolt.
			as aforementioned, but with normal bolts in holes with normal clearance without load reversal	

NOTE It applies $w = \max(p_2; 2e_2)$. See EN 1993-1-8 for definition of d_0, p_2 and e_2.

For ⑤ made of weathering steel the next lower detail category of Figure 8.1 should be used.
For details ②, ④ and ⑤ with hot dip galvanizing and with drilled or reamed holes, the next lower detail category of Figure 8.1 should be used.

Table 10.3 — Welded built-up sections and longitudinal welds

Detail category	Constructional detail	Symbol	Description	Supplementary Requirements
125	① 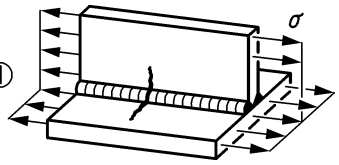		① Automatic or fully mechanised butt welds, welded from both sides, without stop-starts	None.
112			as aforementioned, but with stop-starts	
125	② 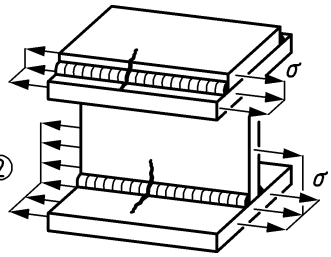		② Automatic or fully mechanised fillet welds, without stop-starts	For cover plates two parallel single fillet welds are necessary. Cover plate ends should be checked using ⑥, ⑦ or ⑧ of Tab. 10.6.
112			as aforementioned, but with stop-starts	
100	③ Manual welding	See above	③ Details ① and ② as manual welds	None.
112	④ 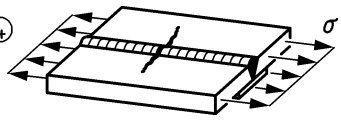		④ Automatic or fully mechanised butt welds, welded from one side, on continuous root backing, without stop-starts	In case of permanent root backing, tack welds should attach the root backing inside the groove.
100			as aforementioned, but with stop-starts or manual butt welds	
125	⑤ 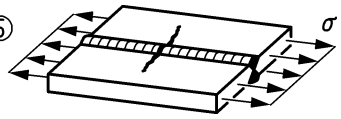		⑤ Butt welds, welded from both sides, ground flush with plate surface in direction of stress, without stop-starts	Extent of NDT according to EN 1090-2: 100%.
112			as aforementioned, but without grinding	None.
90			as aforementioned, but without grinding and with stop-starts	None.
100	⑥ Repair welding	See above	⑥ Repaired automatic or fully mechanised or manual fillet or butt welds for ① to ④	None.
90			as aforementioned, but for ⑤	
Original detail category			as aforementioned, but with grinding or blending smoothly the weld toes for ① to ⑤	
80	⑦ 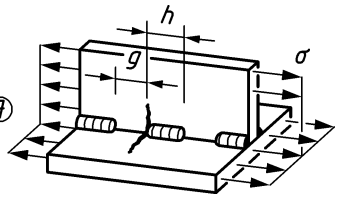		⑦ Chain or staggered intermittent fillet welds with $g/h \leq 2{,}5$	$\Delta\sigma$ should be calculated using normal stress in the parent metal assuming the weld were continuous.

Detail category	Constructional detail	Symbol	Description	Supplementary Requirements
71	⑧ 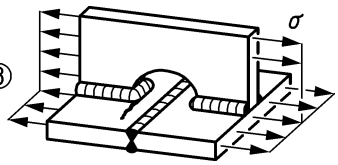		⑧ Butt or fillet or intermittent welds with a cope hole of a height ≤ 60mm For cope holes with a height > 60mm see ① in Table 10.5. NOTE EN 1993-1-5 can have stricter rules on cope holes.	Δσ should be calculated using normal stress in the parent metal assuming the weld were continuous. Longitudinal weld welded all around inside cope hole. Transverse weld should be checked using Table 10.4.
100	⑨ 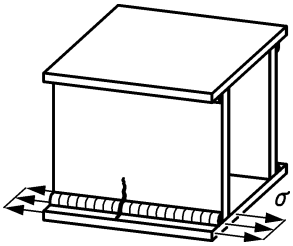		⑨ Automatic or fully mechanized or manual butt or fillet welds in box girders, welded from one side	None.
140	⑩⑪ 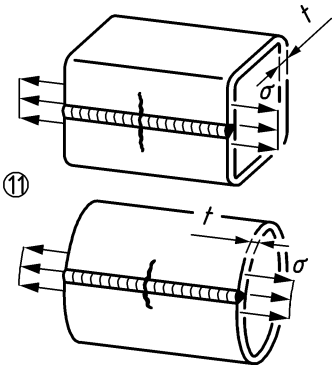		⑩ Automatic or fully mechanised longitudinal welds in hollow sections according to EN 10210 or EN 10219 (without stop-starts as manufactured in a continuous process)	Wall thickness $t \leq 12{,}5$mm
125				Wall thickness $t > 12{,}5$mm
90			⑪ Automatic or fully mechanized longitudinal welds in hollow sections with stop-starts	None.

NOTE 1 Welding other than automatic and fully mechanised welding should be treated as manual welding.
NOTE 2 Slope parameter $m_1 = 3$ of fatigue resistance curve unless otherwise stated in detail category.

Table 10.4 — Transverse welded butt joints (full penetration)

Detail cate-gory	Constructional detail		Symbol	Description	Supplementary Requirements
112	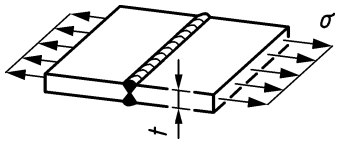 See NOTE 1 for size effect	① 		① Splices in plates and flats of same thickness, welded from both sides, ground flush	Weld all-around ground flush with plate surface in direction of stress. Misalignment ≤ 5% of plate thickness, see NOTE 2.
90		② 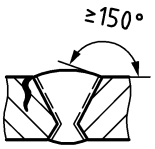		② as aforementioned, but as-welded with flank angle ≥ 150°	②: Welded in welding position PA acc. to EN ISO 6947. ②③: Weld ground flush at plate edges in direction of stress, where relevant, after removing weld run-off pieces. Misalignment ≤ 5% of plate thickness, see NOTE 2.
80		③ 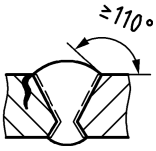		③ as aforementioned, but as-welded with flank angle ≥ 110°	
71	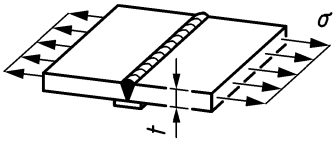	④ ⑤ 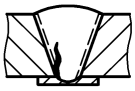		④ Splices in plates and flats of same thickness, welded from one side on permanent root backing, tack welds terminate not closer than 10 mm to the plate edges	See ② and ③. Tack welds should attach the root backing inside the groove.
50	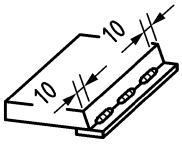			⑤ as aforementioned, but tack welds terminate closer than 10 mm to the plate edge and/or if a good fit cannot be guaranteed	
71	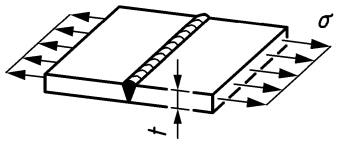 See NOTE 1 for size effect of Detail Category 71	⑥ 		⑥ Splices in plates and flats of same thickness, welded from one side without root backing	See ② and ③. Full penetration checked by appropriate NDT
36					None.
112	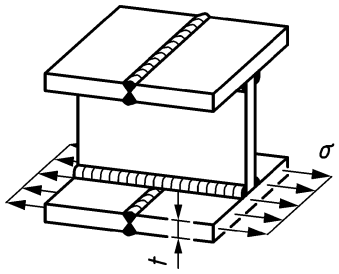 See NOTE 1 for size effect	⑦ 		⑦ Flange and web splices in plate girders, welded from both sides, ground flush	⑦⑧⑨: No full cross-section joint. Splices welded before assembly of girder. Longitudinal weld should be checked using Table 10.3 ⑦: see ①. ⑧: see ② ⑨: see ③.
90		⑧ 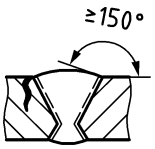		⑧ as aforementioned, but as-welded with flank angle ≥ 150°	
80		⑨ 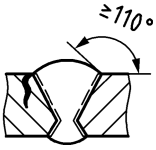		⑨ as aforementioned, but as-welded, with flank angle ≥ 110°	

90	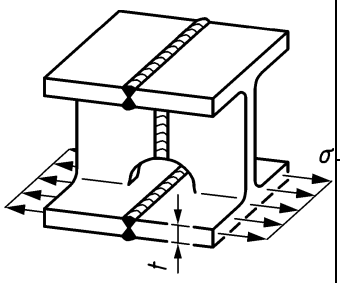 See NOTE 1 for size effect	⑩ 		⑩ Flange splices of full cross-section butt welds of rolled sections of same dimensions without tolerance difference, ground flush, with semi-circular cope holes	Rolled sections cut and rewelded. See ①.
80		⑪ 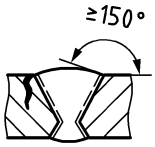		⑪ as aforementioned, but as-welded, with flank angle ≥ 150° or with tolerance differences	See ②.

Detail category	Constructional detail		Symbol	Description	Supplementary Requirements	
112	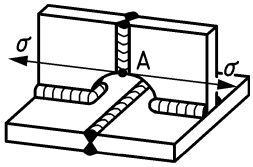	⑫ 		⑫ Web splices in full cross-section joints with cope holes, welded from both sides, ground flush	Δσ should be calculated using the modified nominal stress in the web at location A taking into account stress raising effect of the cope hole.	
90	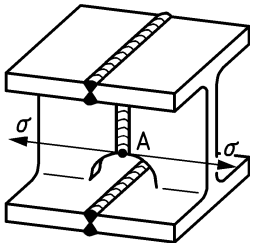	⑬ 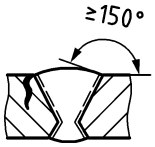		⑬ as aforementioned, but as-welded with flank angle ≥ 150°		
80	See NOTE 1 for size effect	⑭ 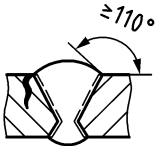		⑭ as aforementioned, but as-welded, with flank angle ≥ 110°		
112	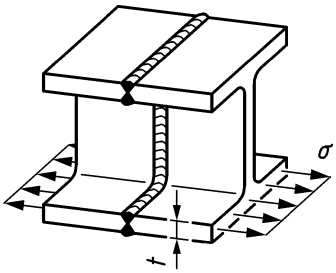	⑮ 		⑮ Full cross-section butt welds of rolled sections of same dimensions without tolerance difference, ground flush, without cope holes	Rolled sections cut and rewelded. See ①.	Full penetration at the region of web-to-flange junction should be checked by NDT.
90		⑯ 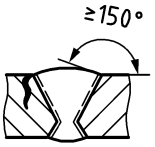		⑯ as aforementioned, but as-welded with flank angle ≥ 150°, and with tolerance differences	See ②.	
80	See NOTE 1 for size effect except for Detail Category 63	⑰ 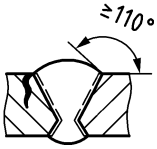		⑰ as aforementioned, but as-welded with flank angle ≥ 110° and with tolerance differences	See ③.	
63		As for ⑮ to ⑰			See ① to ③.	Penetration not checked.
112	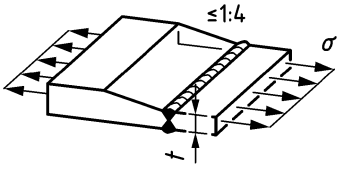	⑱  Taper in thickness		⑱ Splices in plates and flats tapered in width or in thickness with slopes ≤ 1:4, welded from both sides, ground flush	See ①. Δσ should be calculated using normal stress in the thinner plate or flat. See NOTE 3.	
90	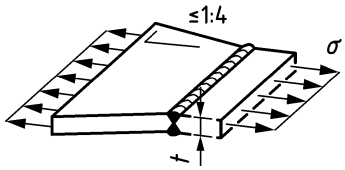 See NOTE 1 for size effect	⑲ 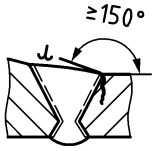 Taper in thickness		⑲ as aforementioned, but as-welded with flank angle ≥ 150°	See ②. Weld toes blended smoothly. See NOTE 3.	
For ①, ⑦, ⑫, ⑮ and ⑱ with hot dip galvanizing the next lower detail category of Figure 8.2 should be used.						

Detail category	Constructional detail		Symbol	Description	Supplementary Requirements
71	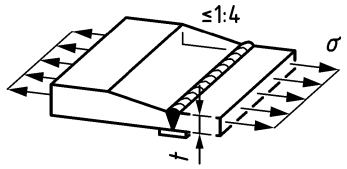	 ⑳ ㉑ Taper in thickness		⑳ Splices in plates and flats tapered in width or in thickness with slopes ≤ 1:4, welded from one side on permanent root backing and tack welds as for ④	See ④. Δσ should be calculated using normal stress in the thinner plate or flat. See NOTE 3.
50	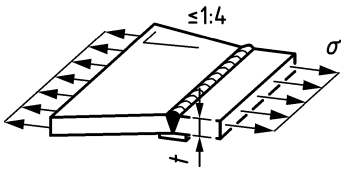 See NOTE 1 for size effect			㉑ as aforementioned, but with tack welds as for ⑤	See ⑤. Δσ should be calculated using normal stress in the thinner plate or flat. See NOTE 3.
71	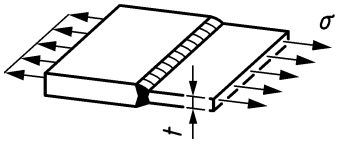 See NOTE 1 for size effect	㉒ 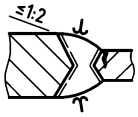		㉒ Splices in plates and flats of different thickness with transition in weld, centrelines aligned	Misalignment ≤ 5% of thinner plate thickness, see NOTE 2. Weld toes blended smoothly. Δσ should be calculated using normal stress in the thinner plate or flat. See NOTE 3.
as ② in Tab. 10.6	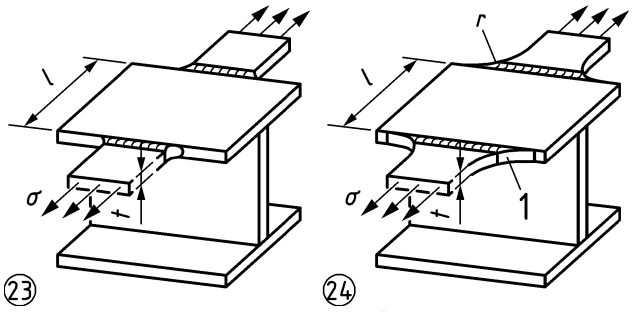 1 – ground			㉓ Transverse butt weld at intersecting flanges as ④ or ⑤ in Table 10.5 ㉔ as aforementioned, but with transition radius r acc. to ⑥ in Table 10.5	Continuous flange should be checked using ④ or ⑤ or ⑥ of Table 10.5.
90	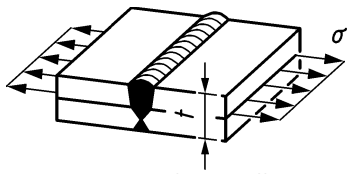 See NOTE 1 for size effect	㉕  1 – end groove weld		㉕ Splices in stacked plates, as-welded with flank angle ≥ 150°,	See ②. The end groove welds should not melt while laying the butt weld. The root of the butt weld should be positioned in the center of one of the plates.
	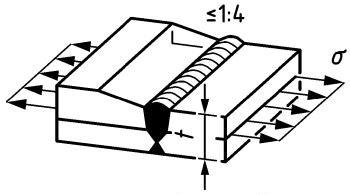 See NOTE 1 for size effect	㉖  1 – end groove weld		㉖ as aforementioned, but tapered in thickness with slopes ≤ 1:4	See ㉑. Weld toes blended smoothly. See NOTE 3.

NOTE 1 Size effect for t > 25mm is considered by stress modification with $k_s = (25/t)^{0,2}$ for as-welded details and $k_s = (25/t)^{0,1}$ for details that are ground flush where t is the thinner plate thickness in mm for which the stress range is calculated.

NOTE 2 Misalignment due to fabrication ≤ 5% of plate thickness. An eccentricity is considered by appropriate nominal stress modification, see D.4(2).

NOTE 3 For ⑱ to ㉒ and ㉖, as parts of girder flanges in bending, the modified nominal stress range approach is used. Recommended stress concentration factors k_f are provided by Annex D.

NOTE 4 Slope parameter m_1 = 3 of fatigue resistance curve unless otherwise stated in detail category.

For ①, ⑦, ⑫, ⑮ and ⑱ with hot dip galvanizing the next lower detail category of Figure 8.2 should be used.

Table 10.5 — Weld attachments and stiffeners

Detail category	Constructional detail	Symbol	Description	Supplementary Requirements
80	① 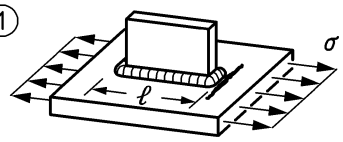 ℓ = distance of weld toes		① Plates and beam flanges subject to normal stress with longitudinal attachment at their surfaces, as-welded, ℓ ≤ 50mm	Attachment welded all around. Attachment thickness is less than its height. Otherwise see ⑤ or ⑥ of Table 10.6. Δσ should be calculated using the normal stress in the parent metal neglecting the attachment.
71			as aforementioned, but 50 < ℓ ≤ 200mm	
63			as aforementioned, but ℓ > 200mm	
as ①	② 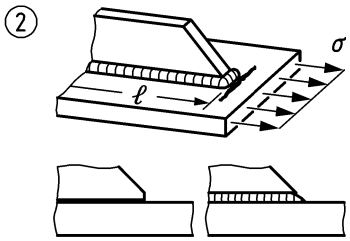 Before and after welding		② as aforementioned, but with chamfered attachment ends, as-welded	See ①.
80	③ 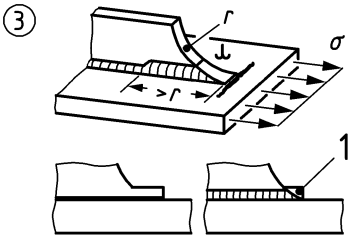 Before and after welding (1 – ground)	 weld termination; rest of weld as ① and ②	③ Plates and beam flanges subject to normal stress with longitudinal attachment at their surfaces, with transition radius r ≥ 150 mm and reinforced (full penetration) weld terminations	See ①. Transition of attached plate by machining or gas cutting before welding, reinforced weld terminations ground smooth until flush with plate surface in direction of stress after welding.
56	④ 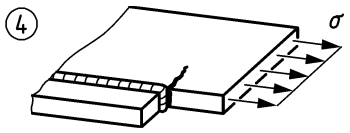		④ Plates or beam flanges subject to normal stress with longitudinal attachment at their edges, as-welded	Attachment welded all around. Δσ should be calculated using normal stress in the parent metal neglecting the attachment.
as ④	⑤ 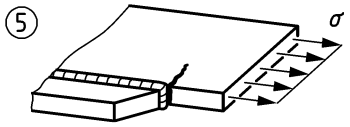		⑤ as aforementioned, but with chamfered attachment ends as-welded	See ④.
71	⑥ 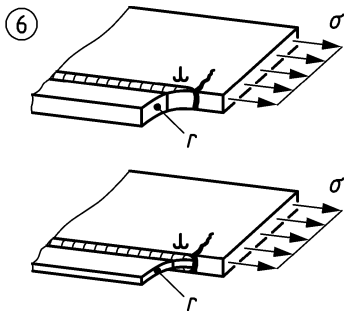	 weld termination; rest of weld 	⑥ Plates or beam flanges subject to normal stress with longitudinal attachment at their edges, with transition radius r ≥ 150mm	See ④. Transition of attached plate by machining or gas cutting before welding, weld terminations ground smooth until flush with plate edge in direction of stress after welding.

Detail category	Constructional detail	Symbol	Description	Supplementary Requirements
	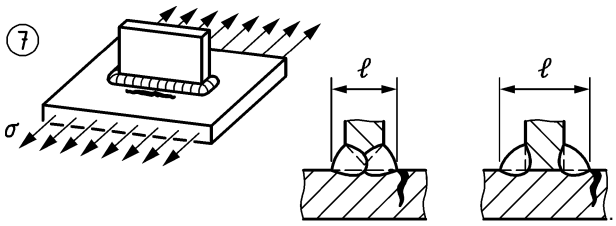		⑦ Plates and beam flanges subject to normal stress with transverse attachment at their surfaces, as-welded:	Δσ should be calculated using normal stress in parent metal neglecting the attachment. Ends of welds should be ground to remove undercut if exists.
80			$\ell \leq 50$mm	
71			$50 < \ell \leq 80$mm	
as ⑦	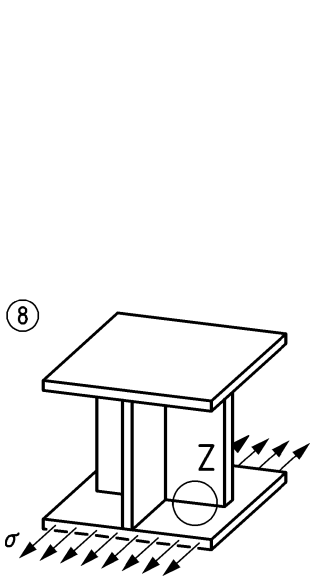 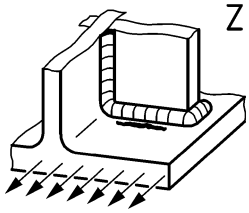		⑧ Flanges and webs of rolled sections subject to normal stress with fitted transverse attachment at their surfaces, welded all round, as-welded	See ⑦. Longitudinal welds, if exist, should be checked using Table 10.3.
as ⑦	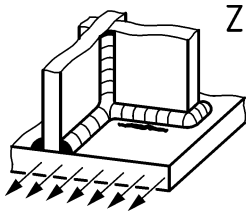		as aforementioned, but of built-up sections (weld intersection)	
as ⑦	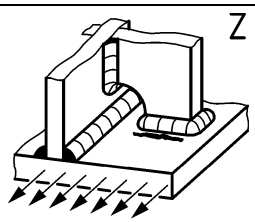		as aforementioned, but with cut holes, welded all around	
as ⑦	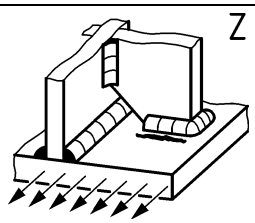		as aforementioned, but not welded all around	
as ⑦	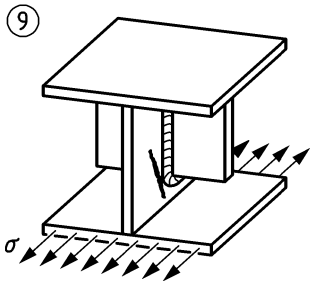		⑨ Webs subject to combined normal and shear stresses with transverse attachment terminating in the web, welded all round, as-welded	Δσ should be calculated using principal stress in the web neglecting the attachment. Ends of welds should be ground to remove undercut if exists.

Detail category	Constructional detail	Symbol	Description	Supplementary Requirements
as ⑦	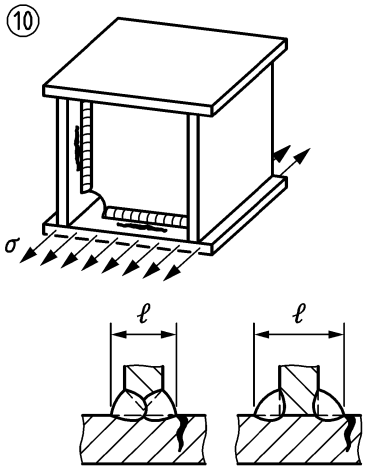		⑩ Box girder sections with diaphragms welded to flanges and/or webs subject to normal stress	See ⑦.
80	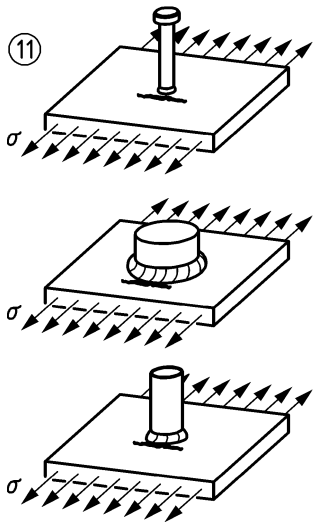		⑪ Plates, flanges or webs subject to normal stress with small attachment (such as welded shear stud, bushings etc.) of any shape at their surfaces Note: It applies $\ell \leq 50$mm for small attachments. See ⑦ for definition of ℓ.	Δσ should be calculated using normal stress in parent metal neglecting the small attachment.
NOTE	Slope parameter $m_1 = 3$ of fatigue resistance curve unless otherwise stated in detail category			

Table 10.6 — Load carrying welded joints

Detail category	Constructional detail	Symbol	Description		Supplementary Requirements
	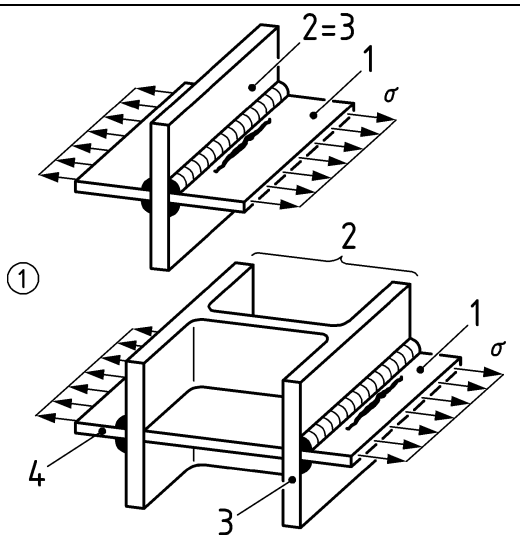 **Key** 1 load carrying attachment 2 member with load-carrying attachment 3 intermediate plate 4 continuity plating 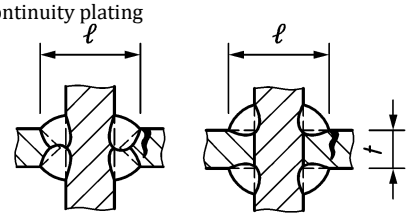		① Load carrying attachment subject to normal stress whose stress pattern is not affected by local deformation of the member to which it is welded, see NOTE 1 to ①, with weld toe failure		Δσ should be calculated using normal stress in the load carrying attachment. The eccentricity of the load carrying attachments (or continuity plating, if exists) should not exceed 15% of the thickness of the intermediate plate. For load carrying attachments with partial penetration butt welds or fillet welds, weld root failure should additionally be checked using ③, see Note 2 to ①.
71			$\ell \leq 80$	For all t [mm]	
63			$80 < \ell \leq 100$		
56			$100 < \ell \leq 120$		
			$\ell > 120$	$t \leq 20$	
50			$120 < \ell \leq 200$	$t > 20$	
			$\ell > 200$	$20 < t \leq 30$	
45			$200 < \ell \leq 300$	$t > 30$	
			$\ell > 300$	$30 < t \leq 50$	
40			$\ell > 300$	$t > 50$	

NOTE 1 to ① Typical examples: symmetrical load carrying attachments at opposite surfaces of a plate (cruciform joint); load carrying attachments welded to I sections or hollow sections stiffened by continuity plating.

NOTE 2 to ① Effective full penetration butt welds according to EN 1993-1-8 are considered as partial penetration butt welds in respect of fatigue.

as ①	② 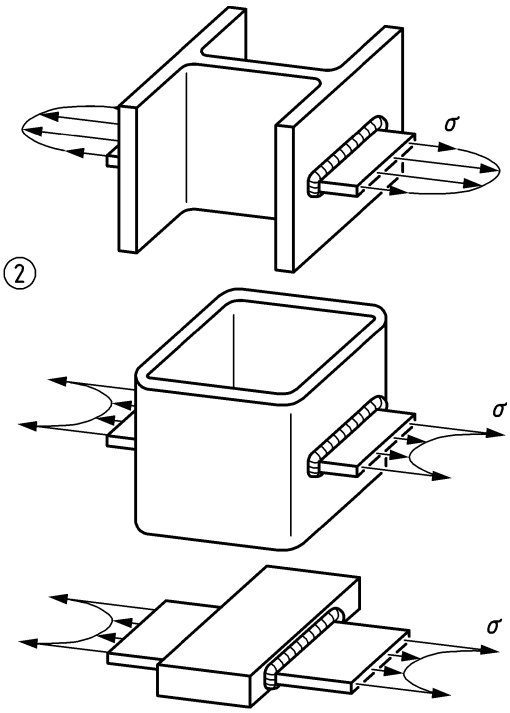	as ①	② as ①, but where the stress pattern of the load carrying attachment is affected by local deformation of the member to which it is welded, see NOTE to ②.	See ①. Δσ should be calculated using modified nominal stress (compare Sec. 7.3.3) in the load carrying attachment.
NOTE to ② Typical examples: load carrying attachments on unstiffened ⌶ sections or unstiffened hollow sections; intersection of plates in the same plane like intersecting flanges of main and cross beam. These details do not show best practice. The calculation of the modified stresses for these details is generally not simple.				

Detail category	Constructional detail	Symbol	Description	Supplementary Requirements
40	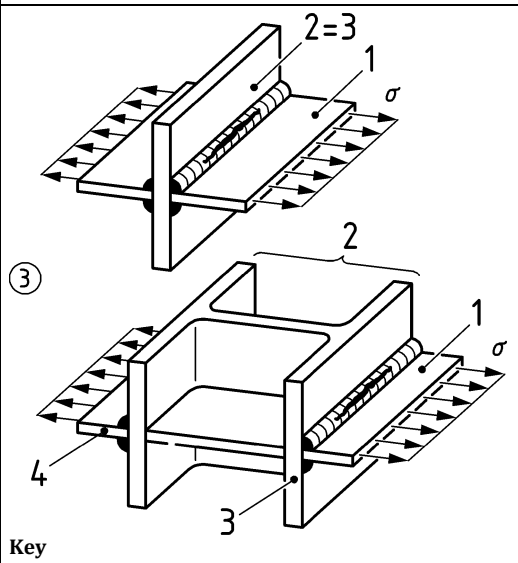 **Key** 1 load carrying attachment 2 member with load-carrying attachment 3 intermediate plate 4 continuity plating 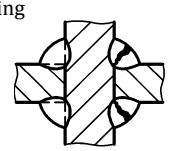		③ Load carrying attachment with partial penetration butt welds or fillet weldssubject to normal stress whose stress pattern is not affected by local deformation of the member to which it is welded, see also Notes to ①,with weld root failure	Δσ should be calculated using nominal stress in the weld. The eccentricity of the load-carrying attachments (or continuity plating, if exists) should not exceed 15% of the thickness of the intermediate plate. For great weld sizes, weld toe failure should additionally be checked using ①, see Note 2 to ①.
			as aforementioned, but where the stress pattern of the load carrying attachment is affected by local deformation of the member to which it is welded, see also Note to ②.	as aforementioned, but Δσ should be calculated using modified nominal stress (compare Sec. 7.3.3) in the weld.
As ①	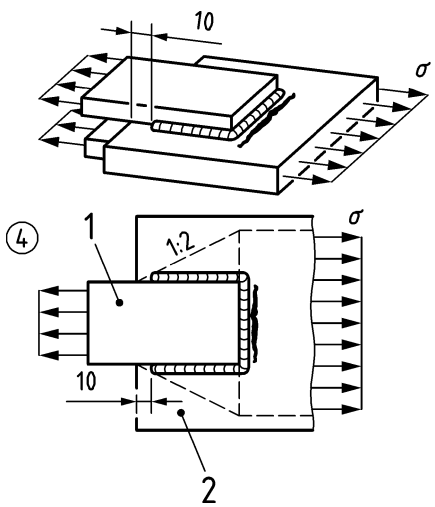 **Key** 1 overlapping plate 2 main plate		④ Fillet welded overlapped joint subject to normal stress with failure of main plate	Δσ should be calculated using the area as shown in the figure and normal stress in main plate. Weld should terminate at least 10mm from plate edge. Failure in the overlapping plates should be verified using ⑤. Shear stress in the weld should be verified using ⑩. Parameter ℓ in ① should be taken as equal to weld length measured in stress direction.

50	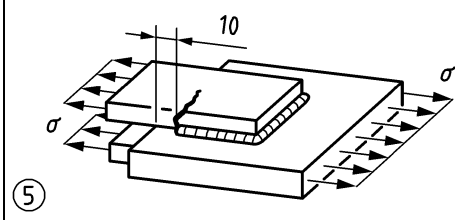	◺	⑤ Fillet welded overlapped joint subject to normal stress with failure of overlapping plates	See ④, but Δσ should be calculated using normal stress in the overlapping plates.

Detail cate-gory	Constructional detail	Symbol	Description	Supplementary Requirements
56 50 45 40 36	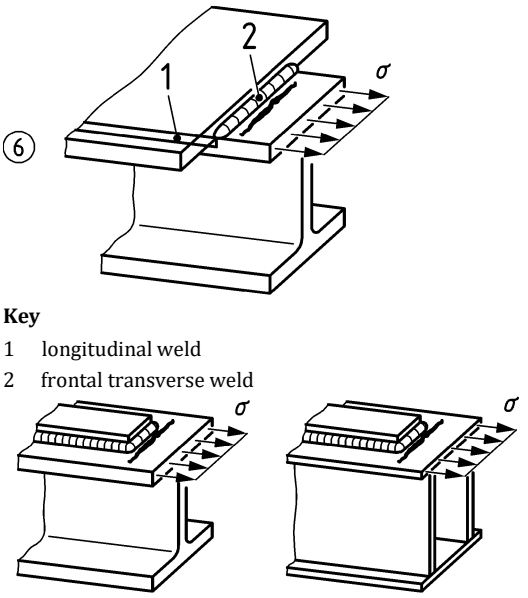 **Key** 1 longitudinal weld 2 frontal transverse weld	◺	⑥ Single or stacked cover plates on flanges in hot-rolled beams and plate girders, with cover plate length ≥ 300mm, with or without frontal transverse weld NOTE See ① for size effect of shorter cover plates. $t_c < t$ [mm] / $t_c \geq t$ [mm] $t \leq 20$ / – $20 < t \leq 30$ / $t \leq 20$ $30 < t \leq 50$ / $20 < t \leq 30$ $t > 50$ / $30 < t \leq 50$ – / $t > 50$	If the cover plate is wider than the flange, a frontal transverse weld should be laid. The weld should be ground to remove undercut.
80	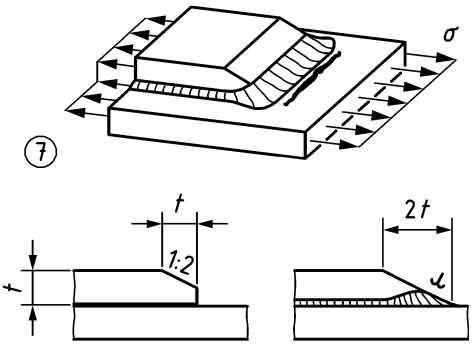 Before and after welding	weld termi-natio n	⑦ Single cover plates on flanges in hot-rolled beams and plate girders, with cover plate length ≥ 300mm, with reinforced frontal transverse weld, chamfered with slope 1:2	Δσ should be calculated using normal stress in the flange. Surface of frontal transverse weld ground, weld toes blended smoothly.
80	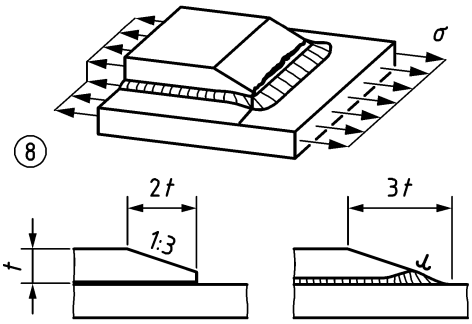 Before and after welding		⑧ as ⑦, but chamfered with slope 1:3	
80 $m_1 = 5$		◺◺ ◺◺ ◺◺ ◺◺	⑨ Joints transmitting shear stress, with continuous fillet welds and partial penetra- tion butt welds	For shear loads in flange-to-web connections in sections of any class, Δτ should be calculated using shear stress in the weld.

100 m_1 = 5	⑨ 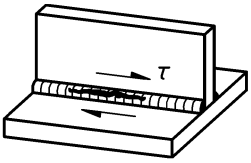		as aforementioned, but with full penetration butt welds NOTE Effective full penetration butt welds according to EN 1993-1-8 are considered as partial penetration butt welds for fatigue.	Eq. (8.25) of EN 1993-1-1 should be used to calculate Δτ. Stress concentrations due to macro-geometric effects should be accounted for.	Δτ should be calculated using shear stress in the parent metal.

Detail category	Constructional detail	Symbol	Description	Supplementary Requirements
80 m_1 = 5	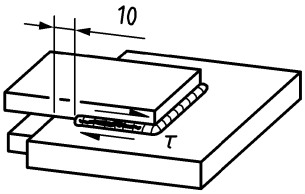 ⑩		⑩ Fillet welded overlapped joint subject to shear stress with weld root failure	As for ④, but Δτ should be calculated using shear stress in the weld considering the total weld length.
90 m_1 = 8, see EN 1994 Part 2	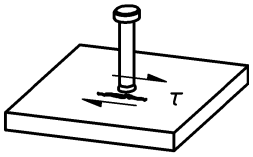 ⑪		⑪ Welded stud shear connectors for composite applications subject to shear stress	Δτ should be calculated using cross section of the stud shear connector. See EN 1994-2.
71	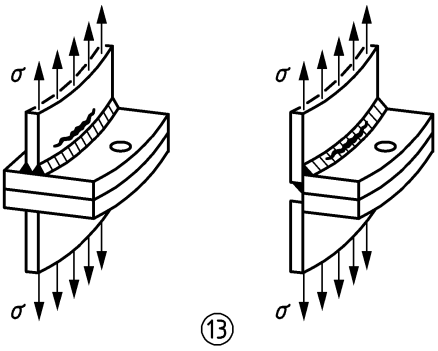 ⑫ ⑬		⑫ Ring flange connection with full penetration welds where the stress pattern of the load carrying member is affected by local deformation of the ring flange to which it is welded	Δσ should be calculated using modified nominal stress (compare Sec. 7.3.3) in the load carrying member. Bolts should be checked using ⑥ of Table 10.2.
36			⑬ as aforementioned, but with fillet welds	As for ⑫, but Δσ should be calculated using modified nominal stress (compare Sec. 7.3.3) in the weld.
NOTE Slope parameter m_1 = 3 of fatigue resistance curve unless otherwise stated in detail category				
For ⑪ with hot dip galvanizing the next lower detail category of Figure 8.2 should be used.				

Table 10.7 — Structural hollow sections

Detail category	Constructional detail	Symbol	Description	Supplementary Requirements
71	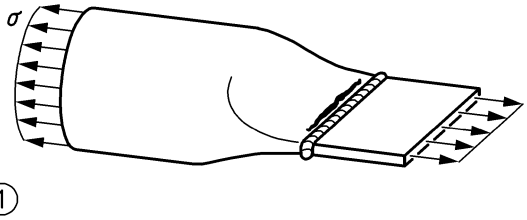	X	① Hollow-section-to-plate joint with flatted hollow section with ∅ ≤ 200mm and wall thickness $t \leq 12{,}5$mm	Δσ should be calculated using normal stress in the hollow section.
45	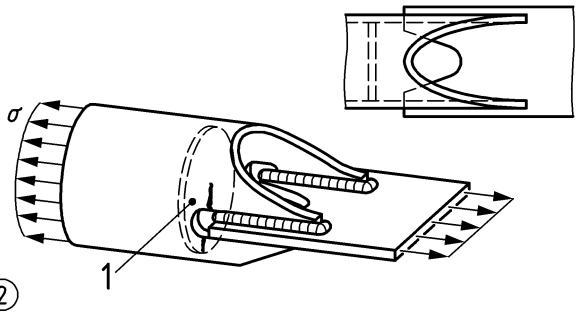 1 – interior sealing plate, if necessary	⊳K V	② Hollow-section-to-plate joint with slitted hollow section,hole at the end of slit, hollow section chamferedwith slopes α ≤ 45° and gusset plate with semi-circular cut-out	Δσ should be calculated using normal stress in the net hollow section with $A_{net} = A - 2\ d_H$ where d_H is the hole diameter at the end of slit. The welds subject to shear should be verified using ⑨ of Table 10.6.
56	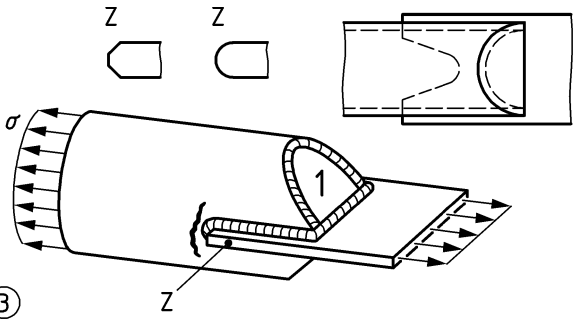 1 – exterior sealing plate Z – plate-tube tip, chamfered or rounded	K HR	③ Hollow-section-to-plate joint with slitted hollow section, with full penetration welds, hollow section chamfered with slopes α ≤ 45°, gusset plate with semi-circular cut-out and rounded plate-tube tip, exterior sealing plate for corrosion protection (single fillet welded)	Δσ should be calculated using normal stress in the hollow section. Sealing plate should be welded after hollow-section-to-plate joint to enable NDT of the full penetration welds.
50		◺ V	as aforementioned, but with partial penetration welds, gusset plate with semi-circular cut-out and rounded or chamfered plate-tube tip	Δσ should be calculated using normal stress in the hollow section.
36		◺	as aforementioned, but with fillet welds	
50	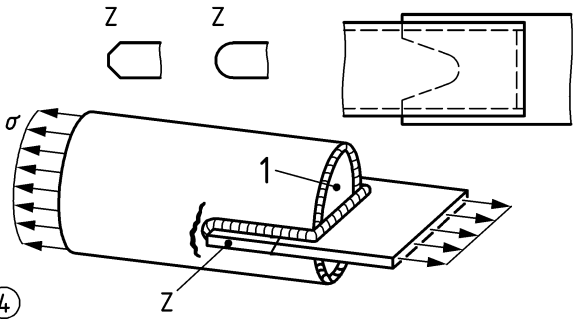 1 – exterior sealing plate Z – plate-tube tip, chamfered or rounded	◺ V	④ Hollow-section-to-plate joint with slitted hollow section, hollow section unchamfered, semi-circular shaped gusset plate with rounded or chamfered plate-tube tip, exterior sealing plate for corrosion protection (single fillet welded)	Δσ should be calculated using normal stress in the hollow section.
36		◺	as aforementioned, but with fillet welds	

71	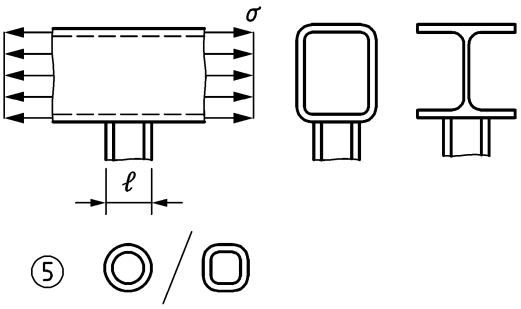		⑤ Weld joint between circular or rectangular structural hollow section and another section with fillet welds subject to normal stress in the continuous hollow section with wall thickness $t \leq 12{,}5$mm	Width parallel to stress direction $\ell \leq 100$mm, else like longitudinal attachment, see Table 10.5.

Detail category	Constructional detail		Symbol	Description	Supplementary Requirements
71	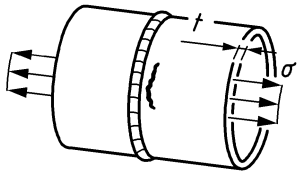 ⑥	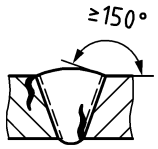		⑥ Butt-welded splices in circular structural hollow sections, welded from one side, with flank angle ≥ 150°, wall thickness 12,5 < t ≤ 20mm	Δσ should be calculated using normal stress in the hollow section. Welded in welding position PA or PB according to EN ISO 6947.
90				as aforementioned, but wall thickness 8 < t ≤ 12,5 mm	
71				as aforementioned, but wall thickness t ≤ 8mm	
71 m_1 = 5		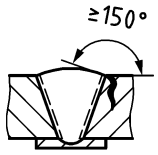		as aforementioned, but on root backing, wall thickness 20 < t ≤ 60mm	Δσ should be calculated using normal stress in the hollow section. Welded in welding position PA, PB, PC or PF according to EN ISO 6947. In case of permanent root backing, tack welds should attach the root backing inside the groove.
71 m_1 = 5	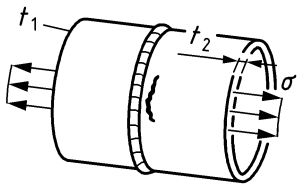 ⑦	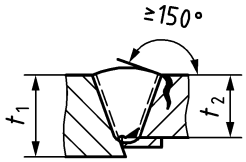		⑦ Butt-welded splices in circular structural hollow sections of different wall thickness, welded from one side on root backing, with flank angle ≥ 150°, wall thicknesses 20 < t_i ≤ 60mm, t_2 / t_1 > 0,6	Δσ should be calculated using normal stress in the hollow section with smaller wall thickness. Welded in welding position PA, PB, PC or PF according to EN ISO 6947. In case of permanent root backing, tack welds should attach the root backing inside the groove.
		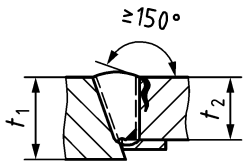			
		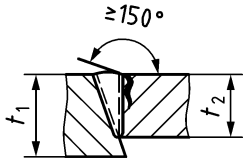		as aforementioned, but without root backing	
56	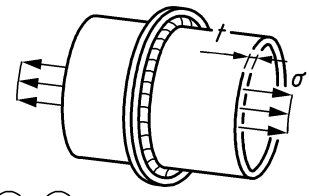 ⑧ ⑨	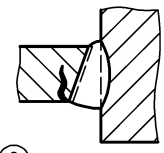 ⑧		⑧ Weld splices in circular structural hollow sections with intermediate plate, wall thickness 8 < t ≤ 12,5 mm, with butt welds, with weld toe failure	Δσ should be calculated using normal stress in the hollow section.
50				as aforementioned, but with wall thickness t ≤ 8mm	
45		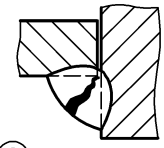 ⑨		⑨ As ⑧ with 8 < t ≤ 12,5mm, but with fillet welds or partial penetration butt welds, with weld root failure	Δσ should be calculated using weld stress. For greater weld sizes, weld toe failure should additionally be checked using ⑧, see Note 1.
40				as aforementioned, but with wall thickness t ≤ 8mm	

Detail category	Constructional detail		Symbol	Description	Supplementary Requirements
71	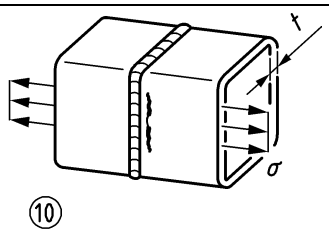	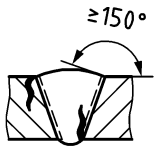		⑩ Butt-welded splices in rectangular structural hollow sections, welded from one side, with flank angle ≥ 150°, wall thickness $8 < t \leq 12{,}5$mm	Δσ should be calculated using normal stress in the hollow section. Welded in welding position PA or PB according to EN ISO 6947.
56				as aforementioned, but wall thickness $t \leq 8$mm	
50	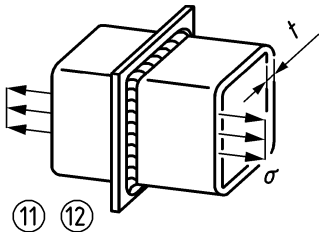	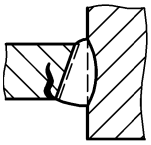		⑪ Weld splices in rectangular structural hollow sections with intermediate plate, wall thickness $8 < t \leq 12{,}5$mm, with butt welds, with weld toe failure	Δσ should be calculated using normal stress in the hollow section.
45				as aforementioned, but with wall thickness $t \leq 8$mm	
40		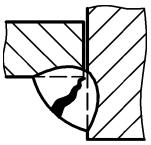		⑫ As ⑪ with $8 < t \leq 12{,}5$mm, but with fillet welds or partial penetration butt welds, with weld root failure	Δσ should be calculated using weld stress. For great weld sizes, weld toe failure should additionally be checked using ⑪, see Note 1.
36				as aforementioned, but with wall thickness $t \leq 8$mm	

NOTE 1 For partial penetration butt welds or fillet welds, weld root failure as assumed for ⑨ and ⑫ is expected for normal weld sizes $a \leq t$. For greater weld sizes, weld toe failure can also occur. Effective full penetration butt welds according to EN 1993-1-8 are considered as partial penetration butt welds in respect of fatigue.

NOTE 2 Slope parameter $m_1 = 3$ of fatigue resistance curve unless otherwise stated in detail category.

Table 10.8 — Lattice girder joints made of structural hollow sections

Detail category	Constructional detail	Symbol	Description	Supplementary Requirements
90 $m_1 = 5$	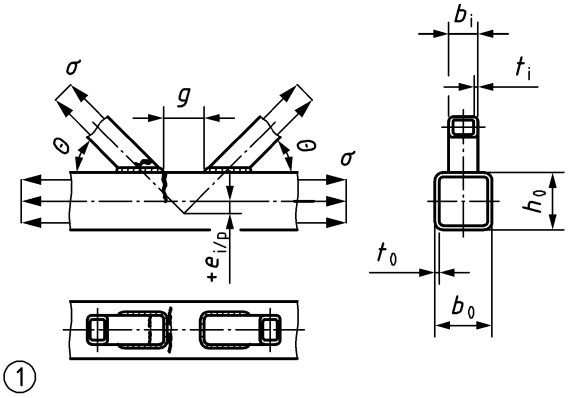	◺ ◺ ◺ ◺	① Gapped K- and N-joints made of circular structural hollow sections with $t_i/t_0 \leq 0{,}5$ for all t_i and t_0	Chords and braces should separately be verified accounting for secondary bending according to Tab. D.2. For fillet welds, see Note 1. – Dimensions: $35° \leq \theta \leq 60°$; $4 < t_0 \leq 20$mm ; $4 < t_i \leq 20$mm ; $d_0/t_0 \cdot t_0/t_i \leq 40$; $d_0 \leq 325$mm ; $0{,}3 \leq d_i/d_0 \leq 0{,}67$ – In-plane eccentricity: $-0{,}5d_0 \leq e_{i/p} \leq 0{,}25d_0$ – Out-of-plane eccentricity: $e_{o/p} \leq 0{,}02d_0$ – Steel: $f_{y,0}$ and $f_{y,i} \leq 700$ N/mm² – Gap: $g \geq 2t_i$
71 $m_1 = 5$			as aforementioned, but with $0{,}5 < t_i/t_0 \leq 0{,}7$ for $t_0 \leq 10$mm	
63 $m_1 = 5$			as aforementioned, but with $0{,}5 < t_i/t_0 \leq 0{,}7$ for $t_0 > 10$mm	
36 $m_1 = 5$			as aforementioned, but with $0{,}7 < t_i/t_0 \leq 1{,}0$ for all t_i and t_0	
71 $m_1 = 5$	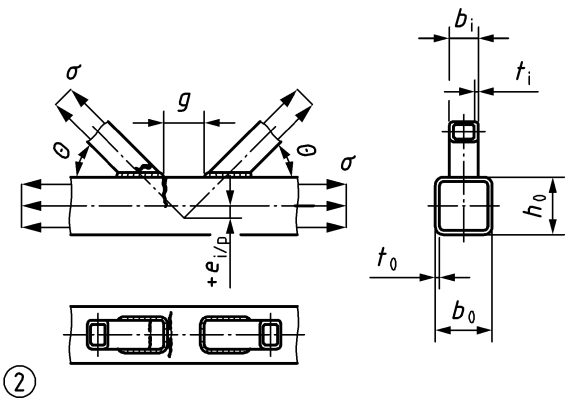		② Gapped K- and N-joints made of rectangular structural hollow sections with $t_i/t_0 \leq 0{,}5$	Chords and braces should separately be verified accounting for secondary bending according to Tab. D.2. Detail categories should be linearly interpolated for $0{,}5 \leq t_i/t_0 \leq 1{,}0$. Fillet welds with $a = t_i$ – Dimensions: $35° \leq \theta \leq 50°$; $t_0 \leq 20$mm ; $t_i \leq 20$mm; $b_0/t_0 \cdot t_0/t_i \leq 25$; $b_0 \leq 200$mm; $0{,}4 \leq b_i/b_0 \leq 1{,}0$; – In-plane eccentricity: $-0{,}5h_0 \leq e_{i/p} \leq 0{,}25h_0$ – Out-of-plane eccentricity: $e_{o/p} \leq 0{,}02b_0$ – Steel: $f_{y,0}$ and $f_{y,i} \leq 700$ N/mm² – Gap: $0{,}5(b_0 - b_i) \leq g \leq 1{,}1(b_0 - b_i)$ and $g \geq 2t_0$
36 $m_1 = 5$			as aforementioned, but with $t_i/t_0 = 1{,}0$	
71 $m_1 = 5$			③ Overlapped K-joints made of circular or rectangular structural hollow sections with $t_i/t_0 \leq 0{,}7$	Chords and braces should separately be verified accounting for secondary bending according to Tab. D.2. Detail categories should be linearly interpolated for $0{,}7 \leq t_i/t_0 \leq 1{,}0$. Fillet welds with $a = t_i$ – Dimensions: $35° \leq \theta \leq 50°$; t_0 and $t_i \leq 8$mm; b_0 and $d_0 \leq 200$mm; $0{,}4 \leq b_i/b_0 \leq 1$; $0{,}25 \leq d_i/d_0 \leq 1$;

56 $m_1 = 5$	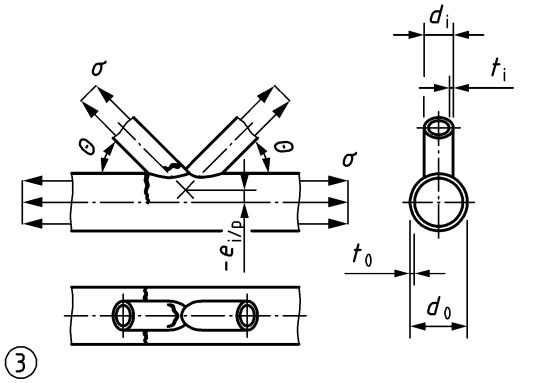 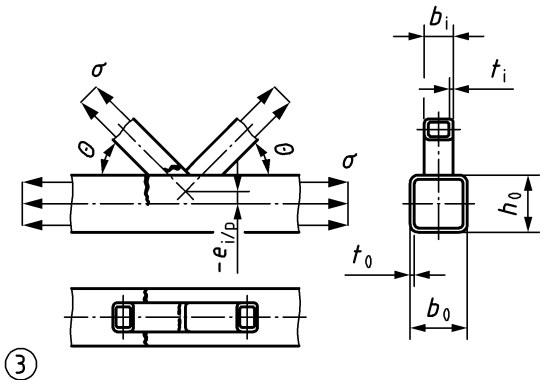 Welds are not shown in these figures.		as aforementioned, but with $t_i/t_0 = 1{,}0$	$b_0/t_0 \cdot t_0/t_i \leq 25$; $d_0/t_0 \cdot t_0/t_i \leq 25$; – In-plane eccentricity: $-0{,}5h_0 \leq e_{i/p} \leq 0{,}25h_0$ $-0{,}5d_0 \leq e_{i/p} \leq 0{,}25d_0$ – Out-of-plane eccentricity: $e_{o/p} \leq 0{,}02b_0$ or $\leq 0{,}02d_0$ – Overlap: 30% ≤ overlap ≤ 100% overlap = $(q/p) \times 100\%$ See Note 2 for definition of p and q.

Detail category	Constructional detail	Symbol	Description	Supplementary Requirements
71 $m_1 = 5$	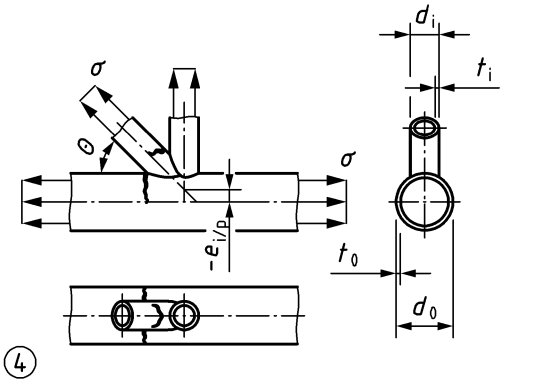		④ Overlapped N-joints made of circular or rectangular structural hollow sections with $t_i/t_0 \leq 0{,}7$	See ③.
50 $m_1 = 5$	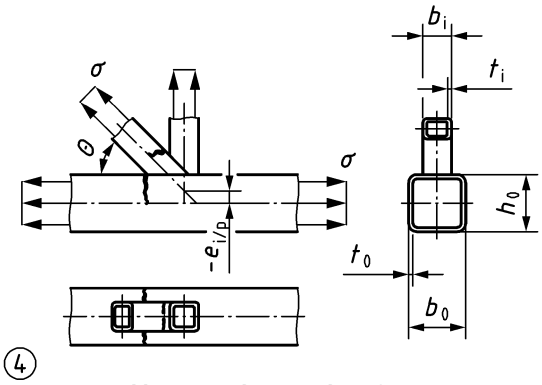 Welds are not shown in these figures.		as aforementioned, but with $t_i/t_0 = 1{,}0$	

NOTE 1 Fillet welds are permitted. For fillet welded K-joints with wall thickness $t_i > 8$mm, weld failure can occur.

NOTE 2 Definition of p and q for overlapped joints

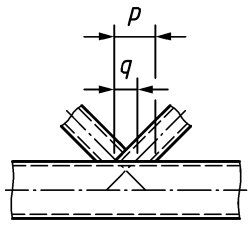

NOTE 3 The usage of the hot-spot stress method, see Annex B, can lead to a more efficient design.

Table 10.9 — Orthotropic decks – closed stiffeners

Detail category	Constructional detail	Symbol	Description	Supplementary Requirements
80	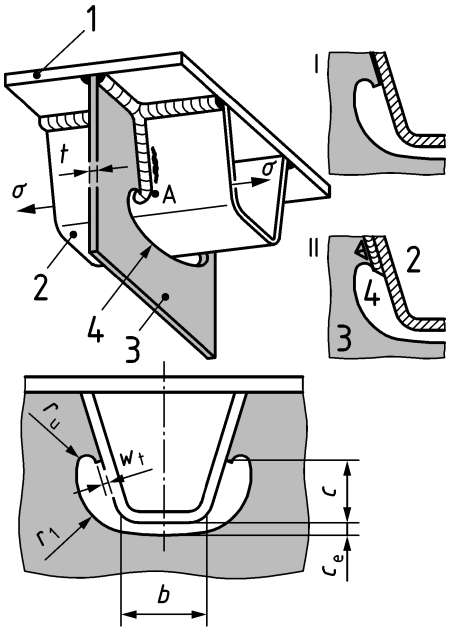 **Key** 1 deck plate 2 continuous stiffener 3 cross beam 4 extended cut-out I before welding II after welding	⊳	① Continuous stiffener to cross-beam joint with extended cut-out in crossbeam subject to normal stress in stiffener, stiffener failure, crossbeam web thickness $t \leq 12$mm	Δσ should be calculated using normal stress in the stiffener web, near bottom of the weld between the crossbeam and stiffener (spot 'A'). Dimensions b, c, c_e, r_1, r_u and w_t for extended cut-out shape as specified in EN 1993-2, Annex C.
71			as aforementioned, but with $t > 12$mm	
			as aforementioned, but with extended cut-out shape according to Fig. C.13 or C.14 of EN 1993-2	Δσ should be calculated using normal stress in the stiffener web, near bottom of the weld between the crossbeam and stiffener.
71	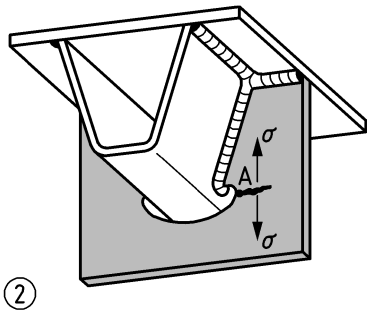	–	② Continuous stiffener to cross-beam joint with extended cut-out in crossbeam subject to normal stress in crossbeam, crossbeam web failure at free edge of extended cut-out	Δσ should be calculated using normal stress in the critical section (spot 'A') of the crossbeam modeled as Vierendeel beam as specified in 9.4.2 of EN 1993-2.
As ①	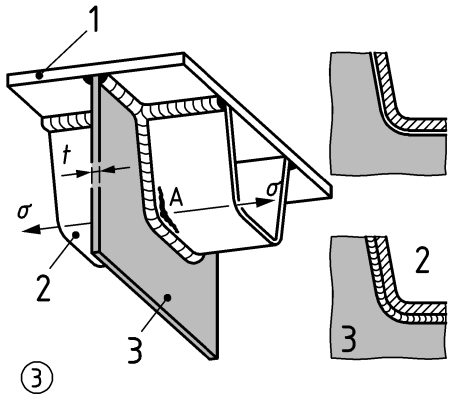 **Key** 1 deck plate 2 continuous stiffener 3 cross beam I before welding II after welding	⊳	③ As ①, but with close fit cut-out in crossbeam	Δσ should be calculated using normal stress in the stiffener bottom flange (spot 'A').

Detail category	Constructional detail	Symbol	Description	Supplementary Requirements
71	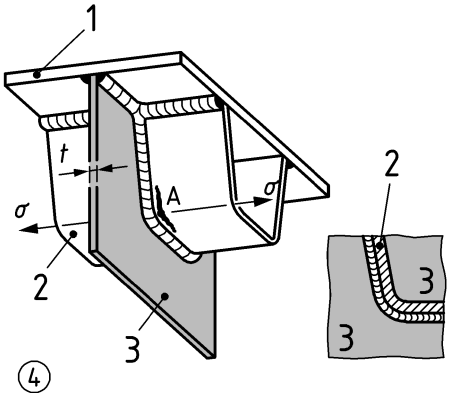 **Key** 1 deck plate 2 discontinuous stiffener 3 cross beam		④ Discontinuous stiffener to crossbeam joint (crossbeams separates stiffeners) subject to normal stress in stiffener, with butt welds, stiffener failure	Δσ should be calculated using normal stress in the stiffener bottom flange
36	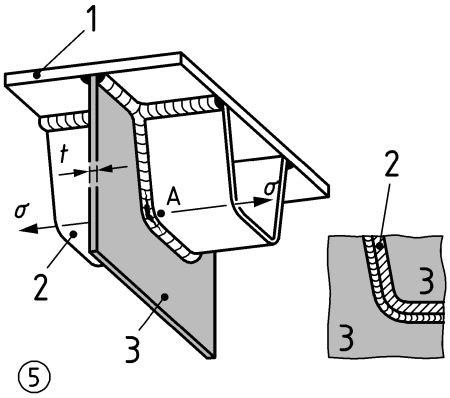		⑤ As ④, but with fillet welds or partial penetration butt welds, weld root failure	Δσ should be calculated using weld stress
100	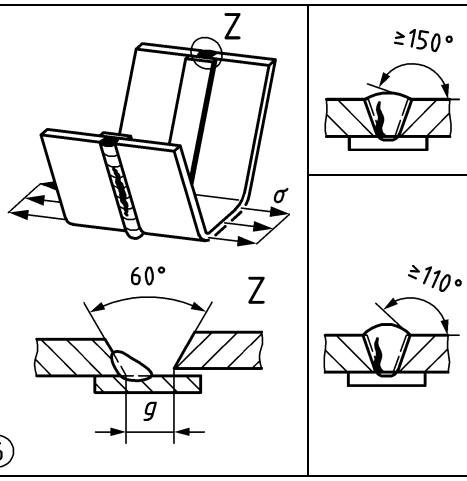		⑥ Splice in stiffener subject to normal stress, welded from one side on permanent root backing, gap between weld preparation edges g > 6 mm	Δσ should be calculated using normal stress in the bottom flange of stiffener. Tack welds should attach the root backing inside the groove.
71			as aforementioned, but 4mm ≤ g ≤ 6mm	
36			as aforementioned, but g < 4mm	
112		As ① in Table 10.4	⑦ Splice in stiffener subject to normal stress, welded from both sides	Δσ should be calculated using normal stress in the bottom flange of stiffener. See ①, ② or ③ in Tab. 10.4.
90		As ② in Table 10.4		

80	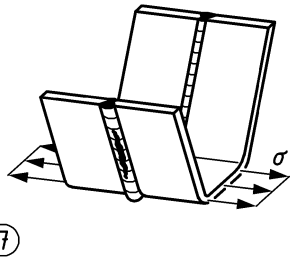	As ③ in Table 10.4		

Detail category	Constructional detail	Symbol	Description	Supplementary Requirements
63	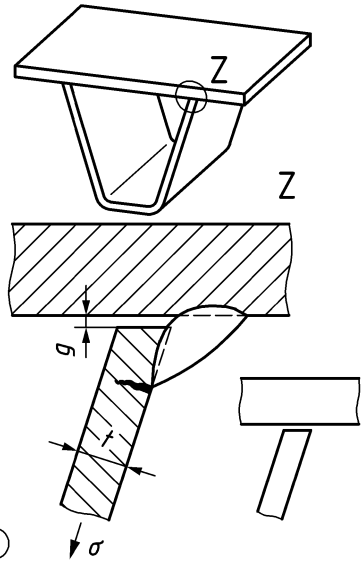		⑧ Stiffener to deck plate joint subject to normal stress in stiffener web accounting for local bending, fillet weld with throat size $a \geq t$, stiffener pre-chamfered, weld gap $g \leq 0{,}5$mm	Δσ should be calculated using normal stress in the stiffener web at the location of joint. Calculation model for local bending as specified in EN 1993-2.
100	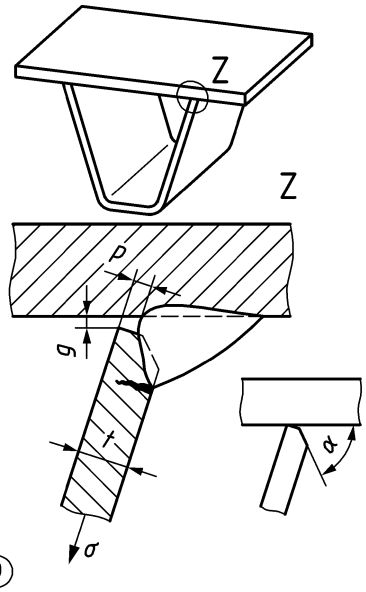	Partial Joint penetration as percentage: PJP = 100(t–p/t) $75 \leq$ PJP $\leq 95\%$	⑨ Stiffener to deck plate joint subject to normal stress in stiffener web, automatic partial penetration welds with throat size $a \geq t$, stiffener with weld preparation, weld gap $g \leq 0{,}5$mm	Δσ should be calculated using normal stress in the stiffener web at the location of joint. Calculation model for local bending as specified in EN 1993-2. Melt-through should not occur.
90			as aforementioned, but manual partial penetration weld with included angle $\alpha \geq 50°$	
50			as aforementioned, but weld gap 0,5mm $\leq g \leq$ 2mm	

Detail category	Constructional detail	Symbol	Description	Supplementary Requirements
112	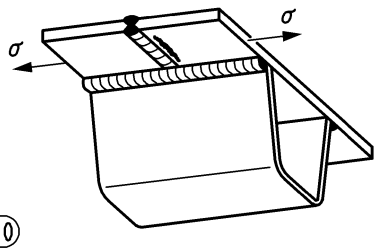	As ① in Table 10.4	⑩ Deck plate splice joint, longitudinal or transverse, subject to normal stress, welded from both sides	Δσ should be calculated using normal stress in the deck plate. See ①, ② or ③ of Table 10.4.
90		As ② in Table 10.4		
80		As ③ in Table 10.4		
112	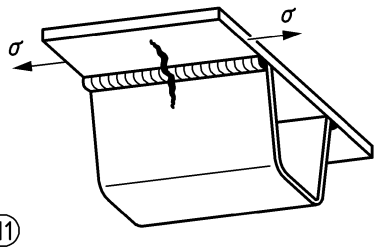	As ①/112 in Table 10.3	⑪ Deck plate to stiffener web joint, subject to normal stress	Δσ should be calculated using normal stress in the deck plate at the location of the joint. See ①, ③ or ⑥ of Table 10.3.
100		As ③ in Table 10.3		
		As ⑥ in Table 10.3		
80	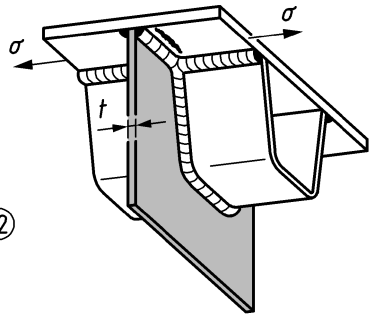	▷	⑫ Deck plate to crossbeam web joint, subject to normal stress in deck plate, crossbeam web thickness $t \leq 12$mm	Δσ should be calculated using normal stress in the deck plate at the cross-beam web location.
71			as aforementioned, but with $t > 12$mm	
NOTE 1 Slope parameter $m_1 = 3$ of fatigue resistance curve unless otherwise stated in detail category.				
For ⑦ and ⑩ with symbol note "As ① in Table 10.4" with hot dip galvanizing the next lower detail category of Figure 8.2 should be used.				

Table 10.10 — Orthotropic decks – open stiffeners

Detail category	Constructional detail	Symbol	Description	Supplementary Requirements
80	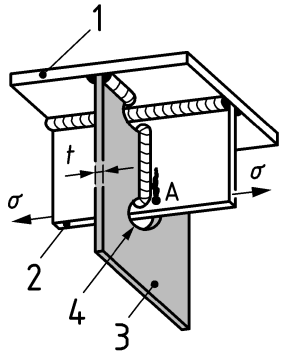 ① **Key** 1 deck plate 2 continuous stiffener 3 cross beam 4 extended cut-out	▷	① Continuous stiffener to crossbeam joint subject to normal stress in stiffener, with extended cut-out in crossbeam, crossbeam web thickness $t \leq 12$mm	$\Delta\sigma$ should be calculated using normal stress in the stiffener, near the bottom of the vertical weld between the crossbeam and the stiffener (spot 'A').
71			As aforementioned, but crossbeam web thickness $t > 12$mm	
As ①	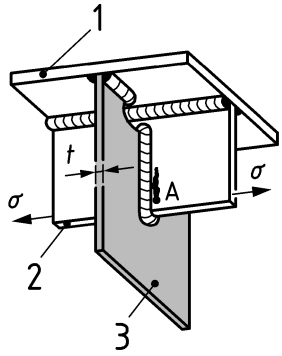 ②	As ①	② Continuous stiffener to crossbeam joint as ①, but close fit cut-out in crossbeam	See ①.
56	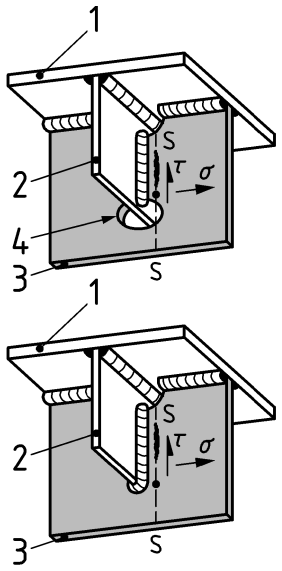 ③	▷	③ Continuous stiffener to crossbeam joint subject to normal and shear stresses in crossbeam, with weld toe failure	$\Delta\sigma_{eq}$ should be calculated combining normal stress σ and shear stress τ in the web of the crossbeam at the critical spot of cross section 'S' by $\Delta\sigma_{eq} =$ $0{,}5\ [\Delta\sigma + (\Delta\sigma^2 + 4\Delta\tau^2)^{0,5}]$ with $\sigma = M_S / W_{net,S}$ $\tau = V_S / A_{w,net,S}$ with $W_{net,S}$ is net section modulus; $A_{w,net,S}$ is net cross-sectional area of web; M_S internal moment; V_S internal shear force.

Detail category	Constructional detail	Symbol	Description	Supplementary Requirements
36	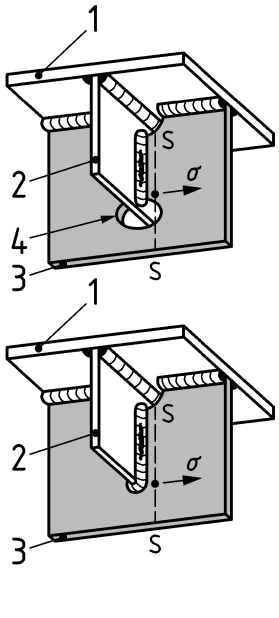 **Key** 1 deck plate 2 continuous stiffener 3 cross beam 4 extended cut-out	▷	④ Continuous stiffener to crossbeam joint, subject to normal stress in crossbeam, weld root failure	$\Delta\sigma$ should be calculated using weld stress σ_w due to internal moment at the critical spot of cross section 'S' by $\sigma_w = \sigma\ t\ /(2a)$ where σ is normal stress in crossbeam web, see ③; t is the thickness of crossbeam web; a is the throat size of weld.
80 $m_1 = 5$	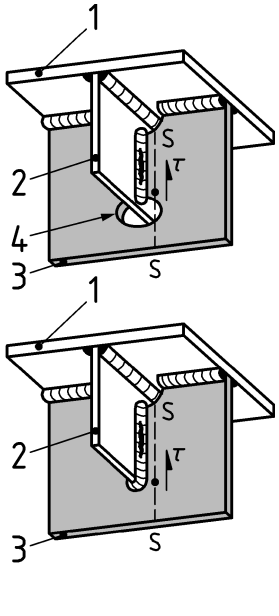 **Key** 1 deck plate 2 continuous stiffener 3 cross beam 4 extended cut-out	▷	⑤ Continuous stiffener to crossbeam joint, subject to shear stress in crossbeam, weld root failure	$\Delta\tau$ should be calculated using shear stress τ_w in the weld due to internal shear force at the critical spot of cross section S by $\tau_w = \tau\ t\ /(2a)$ where τ is shear stress in crossbeam web, see ③; t is the thickness of crossbeam web; a is the throat size of weld.
NOTE 1 Slope parameter $m_1 = 3$ of fatigue resistance curve unless otherwise stated in detail category.				

Table 10.11 — Crane runway beam related details

Detail category	Constructional detail	Symbol	Description	Supplementary Requirements
160	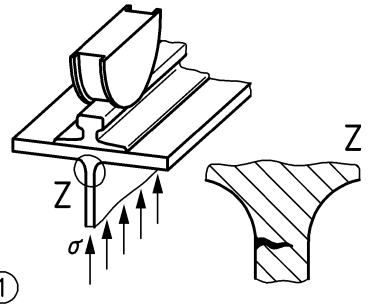	none	① Flange-to-web connection subject to wheel loads in rolled sections	Δσ should be calculated using vertical compressive stress in the web due to wheel loads according to 7.6.2 of EN 1993-6.
100	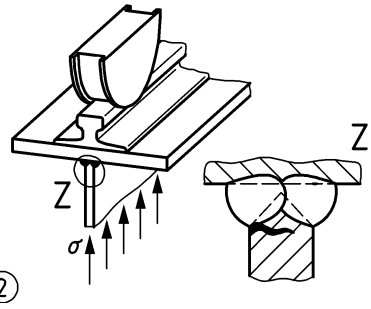		② Welded flange-to-web connection subject to wheel loads, with continuous full penetration butt welds NOTE Effective full penetration butt joints according to EN 1993-1-8 are considered as partial penetration butt joints for fatigue.	
50	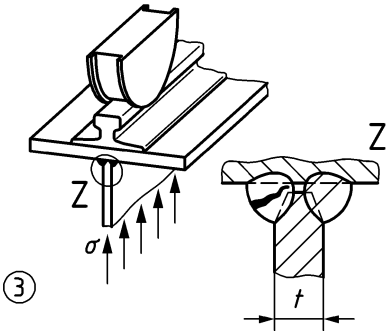		③ Welded flange-to-web connection subject to wheel loads, with continuous partial penetration butt welds and weld sizes $a \leq 0{,}7\ t$	Δσ should be calculated using vertical compressive stress in welds due to wheel loads according to 7.6.2 of EN 1993-6. For great welds with $a > 0{,}7\ t$, Δσ should be calculated using stress in the web. NOTE For greater welds, weld toe failure can additionally occur.
50	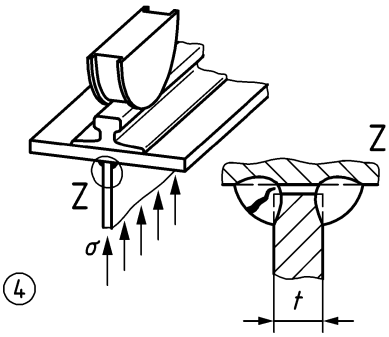		④ Welded flange-to-web connection subject to wheel loads, with continuous double fillet weld, and weld sizes $a \leq 0{,}7\ t$	
100			⑤ Welded T-section flange to web connection subject to wheel loads, with continuous full penetration butt welds, see Note on ②.	See ②.
50			as aforementioned, but with continuous partial penetration butt welds and weld sizes $a \leq 0{,}7\ t$	See ③ and ④.

	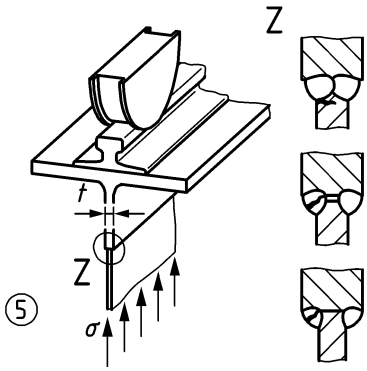		as aforementioned, but with continuous double fillet weld and weld sizes $a \leq 0{,}7\ t$	

Detail category	Constructional detail	Symbol	Description	Supplementary Requirements
56	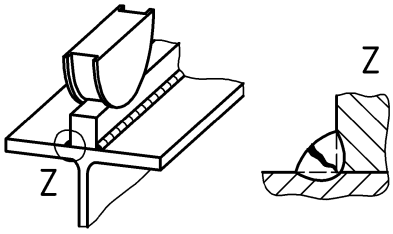 ⑥		⑥ Crane rail as hot-rolled flat or square steel bar subject to wheel loads, fastened to the top flange above supporting webs by continuous longitudinal rail welds	Δσ should be calculated using vertical compressive stress in rail welds due to wheel loads according to 7.8.2 of EN 1993-6
	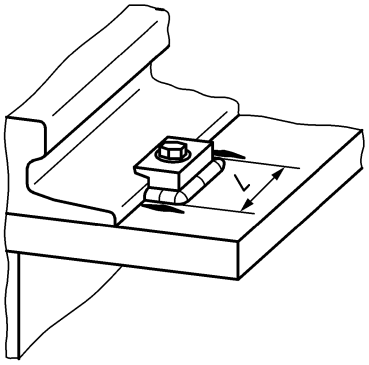 ⑦ L = distance of weld toes [mm]		⑦ Rail clamps welded to top flange, not directly subject to fatigue crane action	Δσ should be calculated using longitudinal normal stress in top flange
80	$L \leq 50$, all t			
71	$50 < L \leq 80$, all t			
63	$80 < L \leq 100$, all t			
56	$100 < L \leq 120$, all t			
	$L > 120$, $t \leq 20$			
50	$120 < L \leq 200$, $t > 20$			
112	all		as aforementioned, but in single span runway beams	
NOTE Slope parameter m_1 = 3 of fatigue resistance curve unless otherwise stated in detail category.				
For ① with hot dip galvanizing the next lower detail category of Figure 8.1 should be used.				

Table 10.12 — Constructional details related to towers, masts and chimneys

No.	1	2	3	4	5
Description	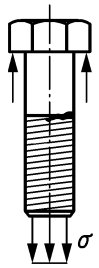	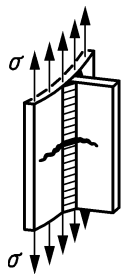	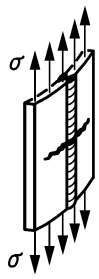	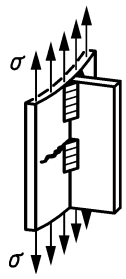	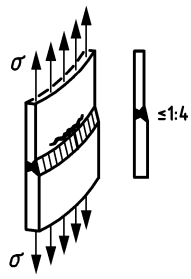
Classification	Table 10.2: ⑥	Table 10.3: ①	Table 10.3: ⑤	Table 10.3: ⑦	Table 10.4: ⑱⑲
No.	**6**	**7**	**8**	**9**	**10**
Description	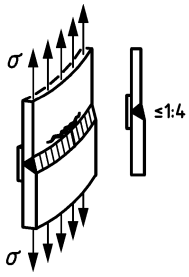	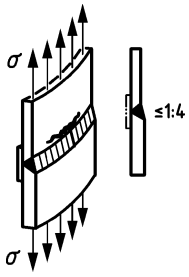	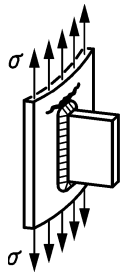	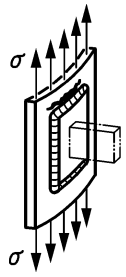	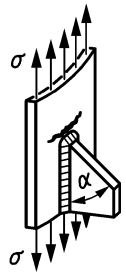
Classification	Table 10.4: ⑳㉑	Table 10.4: ⑳㉑	Table 10.5: ①	Table 10.5: ①	Table 10.5: ②
No.	**11**	**12**	**13**	**14**	**15**
Description	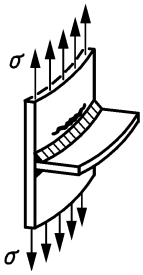	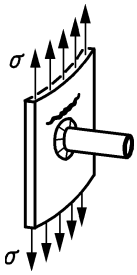	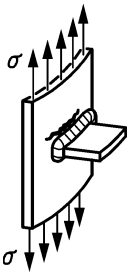	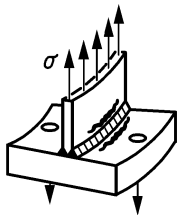	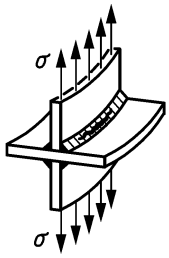
Classification	Table 10.5: ⑦	Table 10.5: ⑪	Table 10.5: ⑦	Table 10.6: ①	Table 10.6: ③
No.	**16**	**17**	**18**		
Description	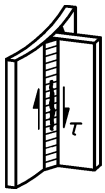	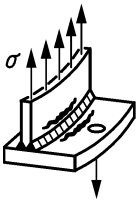	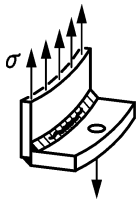		
Classification	Table 10.6: ⑨	Table 10.6: ⑫ See note to table	Table 10.6: ⑬ See note to table		
NOTE Bolts to be checked with detail No. 1 of this table.					

Table 10.13 — Explanation of weld symbols in Tables 10.3 to 10.12

No.	Weld type	Description	Weld Symbol
1	Butt weld with full penetration	– welded from both sides, – root of the first weld back gouged or ground	
2		– welded from both sides, – root of the first weld back gouged or ground, – weld faces flat and flush with the plate surface, surface finish parallel to load direction	
3		– welded from one side on root backing	
4	Butt weld with full penetration with additional fillet weld passes	– welded from both sides, – root of first weld safely melt through	
5		– welded from both sides, – root of first weld gouged or ground, back weld	
6		– welded from one side	
7	Butt weld with partial penetration and additional fillet weld passes		
8	Fillet weld, double fillet welds	– weld toes blended smoothly	
9			
10	Stud welding		
NOTE	Weld symbols according to EN ISO 2553.		

Annex A
(normative)

Verification using cumulative linear damage model

A.1 Use of this annex

(1) This Normative annex contains additional provisions to 6.2, 7.3.2 and 9.4 where verification is undertaken using a cumulative linear damage model.

NOTE This Normative annex can be used independently of the type of verification (nominal, hot spot or effective notch stress method).

A.2 Scope and field of application

(1) This Normative Annex applies to fatigue design situations where the fatigue action effect is not defined by an equivalent constant stress range spectrum with $\Delta\sigma_{e,2,Ed}$ or $\Delta\tau_{e,2,Ed}$ and 2×10^6 stress cycles.

(2) Multi-axial verification using a cumulative linear damage model (according to A.5) is not applicable to hot spot and effective notch stress methods.

A.3 Fatigue action effect

A.3.1 Stresses from fatigue actions

(1) The stresses used for fatigue verification according to this Annex may be derived using one of the fatigue load models in EN 1991, or of any other fatigue load model defined in agreement with prEN 1990:2021, 6.1.3.3.

(2) The stresses should be calculated according to 7.1, 7.2, B.3.1 and C.3.1.

(3) A stress history should be determined from the loading events for the constructional detail under consideration taking account of effects of dynamic magnification of the structural response.

A.3.2 Calculation of stress ranges

(1) Stress ranges should be derived from stress histories using the rainflow or reservoir counting method.

(2) The design value of the stress ranges $\Delta\sigma_{i,Ed}$ and $\Delta\tau_{i,Ed}$ should be determined considering the load effect from the fatigue load model multiplied by the partial factor γ_{Ff}, considering the effective value of the stress range as determined in 7.4, as follows:

$$\Delta\sigma_{i,Ed} = \Delta\sigma(\gamma_{Ff}\, Q_{fat})$$
$$\Delta\tau_{i,Ed} = \Delta\tau(\gamma_{Ff}\, Q_{fat}) \qquad \text{(A.1)}$$

(3) Nominal stress ranges should be determined using 7.3.1 and 7.3.2.

(4) Hot spot stress ranges should be determined using B.3.2.

(5) Effective notch stress ranges should be determined using C.3.2.

A.4 Fatigue resistance

A.4.1 Endurance for the nominal stress method

(1) For constant amplitude loading with normal stress ranges $\Delta\sigma_{\mathrm{Ed}}$, the design value of endurance, N_{Rd}, should be determined as follows:

$$N_{\mathrm{Rd}} = 2 \times 10^6 \left(\frac{\Delta\sigma_{\mathrm{C}}/\gamma_{\mathrm{Mf}}}{\Delta\sigma_{\mathrm{Ed}}}\right)^{m_1} \text{ for } \Delta\sigma_{\mathrm{Ed}} \geq \Delta\sigma_D/\gamma_{\mathrm{Mf}} \tag{A.2}$$

where:

$\Delta\sigma_{\mathrm{D}}$ is the constant amplitude fatigue limit at N_{D}, Figures 8.1 to 8.3

m_1 is the first slope parameter of the fatigue resistance curve, Figures 8.1 to 8.3

$\Delta\sigma_{\mathrm{Ed}}$ is the design value of the applied stress range, see 7.3

(2) Constant amplitude stress ranges $\Delta\sigma_{\mathrm{Ed}}<\Delta\sigma_{\mathrm{D}}/\gamma_{\mathrm{Mf}}$ may be neglected.

(3) For variable amplitude loading with normal stress ranges above and below the constant amplitude fatigue limit $\Delta\sigma_{\mathrm{D}}$, the design value of endurance, $N_{i,\mathrm{Rd}}$, corresponding to the stress range $\Delta\sigma_{i,\mathrm{Ed}}$ should be determined for each stress range in the spectrum based on the extended fatigue resistance curves as follows:

$$N_{i,\mathrm{Rd}} = 2 \times 10^6 \left(\frac{\Delta\sigma_{\mathrm{C}}/\gamma_{\mathrm{Mf}}}{\Delta\sigma_{i,\mathrm{Ed}}}\right)^{m_1} \text{ for } \Delta\sigma_{i,\mathrm{Ed}} \geq \Delta\sigma_D/\gamma_{\mathrm{Mf}} \tag{A.3}$$

$$N_{i,\mathrm{Rd}} = N_{\mathrm{D}} \left(\frac{\Delta\sigma_{\mathrm{D}}/\gamma_{\mathrm{Mf}}}{\Delta\sigma_{i,\mathrm{Ed}}}\right)^{m_2} \text{ for } \Delta\sigma_{\mathrm{L}}/\gamma_{\mathrm{Mf}} \leq \Delta\sigma_{i,\mathrm{Ed}} \leq \Delta\sigma_{\mathrm{D}}/\gamma_{\mathrm{Mf}} \tag{A.4}$$

where:

$\Delta\sigma_{\mathrm{D}}$ is the constant amplitude fatigue limit at N_{D}, see Figures 8.1 to 8.3

$\Delta\sigma_{\mathrm{L}}$ is the variable amplitude fatigue limit at N_{L}, see Figures 8.1 to 8.3

m_1 is the first slope parameter of the fatigue resistance curve, see Figures 8.1 to 8.3

m_2 is the slope parameter of the extended fatigue resistance curve, see Figures 8.1 to 8.3

$\Delta\sigma_{i,\mathrm{Ed}}$ is the design value of the applied stress range, see 7.3

(4) Stress ranges in variable amplitude loading with $\Delta\sigma_{i,\mathrm{Ed}}<\Delta\sigma_{\mathrm{L}}/\gamma_{\mathrm{Mf}}$ may be neglected.

(5) For either constant or variable amplitude loading with shear stress ranges, the design value of endurance, $N_{i,\mathrm{Rd}}$, corresponding with the stress range $\Delta\tau_{i,\mathrm{Ed}}$ should be determined for each stress range in the spectrum as follows:

$$N_{i,\mathrm{Rd}} = 2 \times 10^6 \left(\frac{\Delta\tau_{\mathrm{C}}/\gamma_{\mathrm{Mf}}}{\Delta\tau_{i,\mathrm{Ed}}}\right)^{m_1} \text{ for } \Delta\tau_{i,\mathrm{Ed}} \geq \Delta\tau_{\mathrm{D}}/\gamma_{\mathrm{Mf}} \tag{A.5}$$

where:

$\Delta\tau_{\mathrm{D}}$ is the constant amplitude fatigue limit at N_{D}, see Figure 8.4

m_1 is the slope parameter of the fatigue resistance curve, see Figure 8.4

$\Delta\tau_{i,\mathrm{Ed}}$ is the design value of the applied stress range, see 7.3

(6) Stress ranges $\Delta\tau_{i,\mathrm{Ed}}<\Delta\tau_{\mathrm{D}}/\gamma_{\mathrm{Mf}}$ may be neglected.

(7) The size effect due to thickness or other dimensional effects should be considered according to 8.3.1 of this standard.

NOTE Characteristic fatigue resistance values for the nominal stress method without consideration of size effects are given in Table A.1.

Table A.1 — Characteristic fatigue resistance values in N/mm² for curves in Figures 8.1 to 8.4

Figure	Detail category	Slope parameter		Characteristic CAFL at N_D [cycles]	Characteristic values [N/mm²]		
		m_1	m_2		At 10^4 cycles	$\Delta\sigma_D$	$\Delta\sigma_L$
8.1	180	5	9	2×10^6	519	180	116
	160				462	160	103
	140				404	140	90,6
	125				361	125	80,9
	112				323	112	72,5
	100				288	100	64,7
	90				260	90,0	58,3
	80				231	80,0	51,8
8.2a	160	3	5	5×10^6	936	118	64,8
	140				819	103	56,7
	125				731	92,1	50,6
	112				655	82,5	45,3
	100				585	73,7	40,5
	90				526	66,3	36,4
	80				468	58,9	32,4
	71				415	52,3	28,7
8.2b	63	3	5	1×10^7	368	36,8	23,2
	56				327	32,7	20,7
	50				292	29,2	18,4
	45				263	26,3	16,6
	40				234	23,4	14,8
	36				210	21,1	13,3
8.3	90	5	9	1×10^7	260	65,2	50,5
	71				205	51,5	39,8
	56				162	40,6	31,4
	50				144	36,2	28,1
	45				130	32,6	25,3
	35				104	26,1	20,2
8.4a	100	5	–	1×10^8	288	45,7	45,7
	80				231	36,6	36,6
8.4b	90	8	–	1×10^8	162	58,3	58,3

A.4.2 Endurance for the hot spot stress method

(1) When using the hot spot stress method, the design value of endurance $N_{i,\mathrm{Rd}}$ for each stress range in the spectrum should be calculated using B.4.

NOTE When using B.4, characteristic fatigue resistance values are given in Table A.2.

Table A.2 — Characteristic fatigue resistance values in N/mm² for curves in Figures B.3 and B.4

Figure	Detail category	Slope parameter		Characteristic CAFL at N_D [cycles]	Characteristic values [N/mm²]		
		m_1	m_2		At 10^4 cycles	$\Delta\sigma_{HS,D}$	$\Delta\sigma_{HS,L}$
B.3	112	3	5	5×10^6	655	82,5	45,3
	100				585	73,7	40,5
	90				526	66,3	36,4
B.4	193	3,36	5	5×10^6	933	147	80,8
	178	3,30			884	134	73,9
	149	3,17			790	111	61,2
	128	3,07			717	94,6	52,0
	114	3,00			669	84,3	46,3
	97	2,90			601	70,4	38,7
	88	2,85			566	63,8	35,0
	74	2,75			509	53,3	29,3
	69	2,72			485	49,2	27,0

A.4.3 Endurance for the effective notch stress method

(1) When using the effective notch stress method the design value of endurance $N_{i,\mathrm{Rd}}$ for each stress range in the spectrum should be calculated using C.4.

NOTE When using C.4, characteristic fatigue resistance values are given in Table A.3.

Table A.3 — Characteristic fatigue resistance values in N/mm² for curves in Figure C.2

Figure	Detail category	Slope parameter		Characteristic CAFL at N_D [cycles]	Characteristic values [N/mm²]		
		m_1	m_2		At 10^4 cycles	$\Delta\sigma_{ENS,D}$	$\Delta\sigma_{ENS,L}$
C.2	225	3	5	1×10^7	1316	132	83,3
	200				1170	117	73,8

A.4.4 Endurance for welded joints subjected to High Frequency Mechanical Impact Treatment

(1) When dealing with welded joints subjected to High Frequency Mechanical Impact Treatment, the design value of endurance $N_{i,\mathrm{Rd}}$ for each stress range in the spectrum should be calculated using F.4.

NOTE When using F.4, characteristic fatigue resistance values are given in Table F.2 to Table F.7.

A.5 Fatigue verification

(1) The verifications with respect to elastic behaviour, considering nominal stresses, given in 9.1 should be performed.

(2) The verifications with respect to fatigue limit given in 9.3 of this standard may be used for infinite life design.

NOTE Stress ranges $\Delta\sigma_{\max,\mathrm{Ed}}$ and $\Delta\tau_{\max,\mathrm{Ed}}$ in 9.3 are $\max\Delta\sigma_{i,\mathrm{Ed}}$ and $\max\Delta\tau_{i,\mathrm{Ed}}$.

(3) For finite life design, the design value of the damage D accumulated during the design service life should be calculated from:

$$D = \sum_{i}^{n} \frac{N_{i,\mathrm{Ed}}}{N_{i,\mathrm{Rd}}} \tag{A.6}$$

where

$N_{i,\mathrm{Ed}}$ is the number of cycles in the spectrum corresponding with the stress range $\Delta\sigma_{i,\mathrm{Ed}}$ or $\Delta\tau_{i,\mathrm{Ed}}$

$N_{i,\mathrm{Rd}}$ is the design value of endurance for the stress range $\Delta\sigma_{i,\mathrm{Ed}}$ or $\Delta\tau_{i,\mathrm{Ed}}$.

NOTE For the example of a four-band ordinary stress range spectrum according to Figure A.1, Figure A.2 gives the corresponding endurances. The design values of the stress range $\Delta\sigma_{i,\mathrm{Ed}}$ are plotted in these figures.

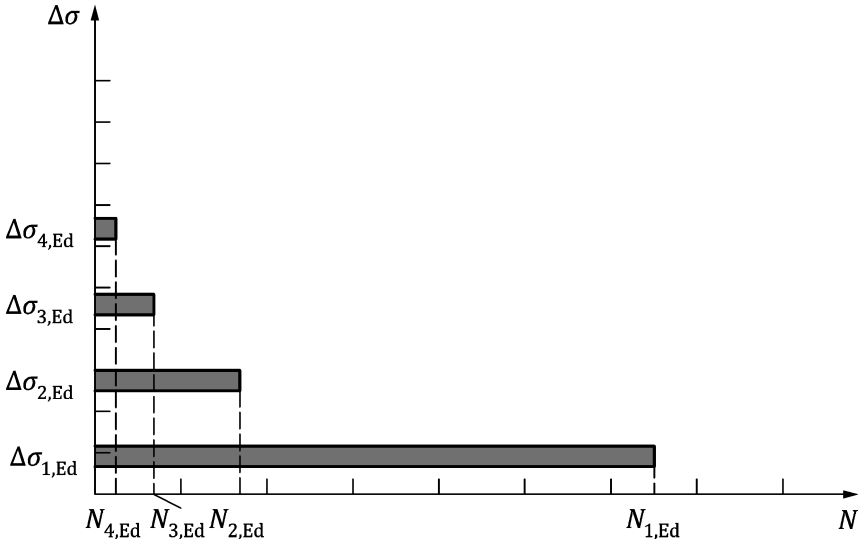

Figure A.1 — Example of a four-band ordinary stress range spectrum

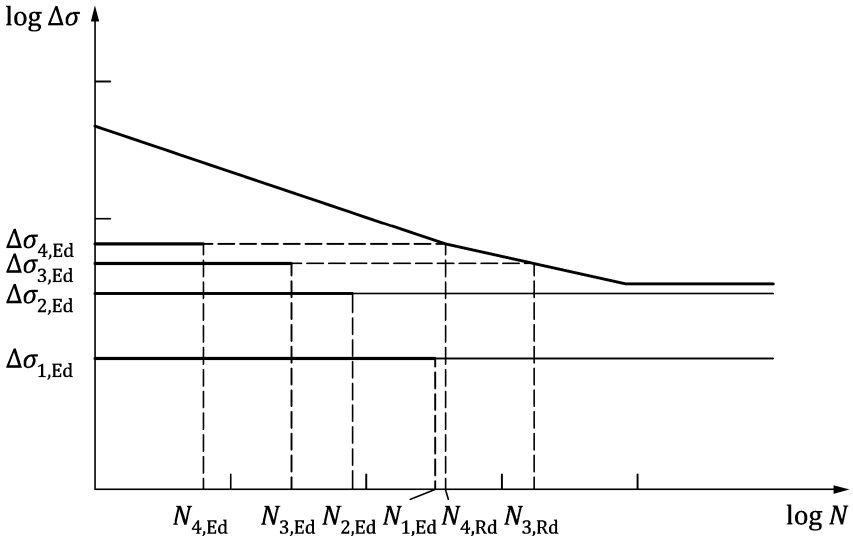

NOTE

- The blue curve is the extended S-N curve.
- $N_{1,R}$ and $N_{2,R}$ are not provided because the corresponding stress ranges are below VAFL $\Delta\sigma_L$.

Figure A.2 — Example of determination of endurances for four bands of the spectrum

(4) The design value of the damage D should satisfy following relationship:

$$D \leq 1{,}0 \tag{A.7}$$

(5) If the considered location of a constructional detail (see cracks indicated in Table 10.1 to Table 10.12) is subject to a combination of nominal normal and shear stresses, the fatigue verification should consider their combined effects as follows:

a) If the normal and shear stresses simultaneously occur during each loading event, the principal stresses should be considered and the corresponding stress ranges should be verified according to Formula (A.7);
b) If the normal and shear stresses do not simultaneously occur during each loading event, the components of damage should be added according to Miner's summation:

- for failure in parent metal (including crack initiation at weld toes) subjected to nominal normal stress ranges $\Delta\sigma_x$, $\Delta\sigma_y$, $\Delta\sigma_z$ and nominal shear stress ranges $\Delta\tau_{xy}$, $\Delta\tau_{xz}$, $\Delta\tau_{yz}$:

$$\sum_{j=x,y,z} D_{j,\sigma} + \sum_{k=xy,xz,yz} D_{k,\tau} \leq 1{,}0 \tag{A.8}$$

where:

$D_{j,\sigma}$ is the damage determined using Formula (A.6) for the ranges of the normal stress component σ_j with j = x, y or z

$D_{k,\tau}$ is the damage determined using Formula (A.6) for the ranges of the shear stress component τ_k with k = xy, yz or xz

- for weld failure (crack initiation at weld root) due to weld stresses according to 7.2(5):

$$D_\sigma + D_\tau \leq 1{,}0 \tag{A.9}$$

where

D_σ is the damage determined using Formula (A.6) for normal stress ranges, and

D_τ is the damage determined using Formula (A.6) for shear stress ranges.

(6) If normal and shear nominal stresses cause the formation of fatigue cracks at different locations, a separate fatigue verification for both locations should be performed according to Formula (A.7).

Annex B
(normative)

Hot spot stress method

B.1 Use of this annex

(1) This normative annex contains additional provisions to 6.1(3) for the determination of fatigue effects and corresponding fatigue resistances for the verification of welded constructional details using the hot spot stress method.

B.2 Scope and field of application

(1) This normative annex applies only to welded constructional details with a potential crack location at the weld toe.

NOTE 1 It does not apply for welded constructional details with potential cracks starting from the weld root. Either the nominal stress method or the effective notch stress method can be used for evaluating constructional details with a potential crack location at the weld root.

NOTE 2 Guidance on the modelling using FE analysis is given in EN 1993-1-14.

(2) This normative annex supplements and/or modifies the provisions according to Clause 9 and Annex A for the hot spot stress method.

NOTE The national annex can give conditions for the application of the methods given in this annex. It can give guidance on which method takes priority when the fatigue verification of a classified constructional detail by another method gives a different result.

(3) Verification of orthotropic bridge decks using geometrical stresses may be done according to TS 1993-1-901.

NOTE The National annex can give information on the use of TS 1993-1-901.

B.3 Fatigue action effect

B.3.1 Stresses from fatigue actions

(1) The hot spot stress should be calculated assuming linear-elastic material behaviour and an idealized geometry.

NOTE Guidance on the constructional detail geometry is given in EN 1993-1-14.

(2) The distinction between hot spot type “a”, type “b” and type “c” in Figure B.1 should be made for the determination of the hot spot stress to account for the stress distribution through thickness of the plate or wall thickness of the structural hollow section joint with the potential fatigue crack.

(3) Hot spot type “a”, indicating cracking at the weld toe on a plate surface or on a section, should be considered when the stress considerably varies through thickness of the plate with the potential fatigue crack.

(4) Hot spot type “b”, indicating cracking at a plate edge or a section, should be considered if the stress at the potential fatigue crack location (hot spot) is independent of the plate or cross-sectional wall thickness.

(5) Hot spot type “c”, indicating cracking in a structural hollow section, should be considered if the stress at the potential fatigue crack location (hot spot) is within a lattice girder joint made of structural hollow sections.

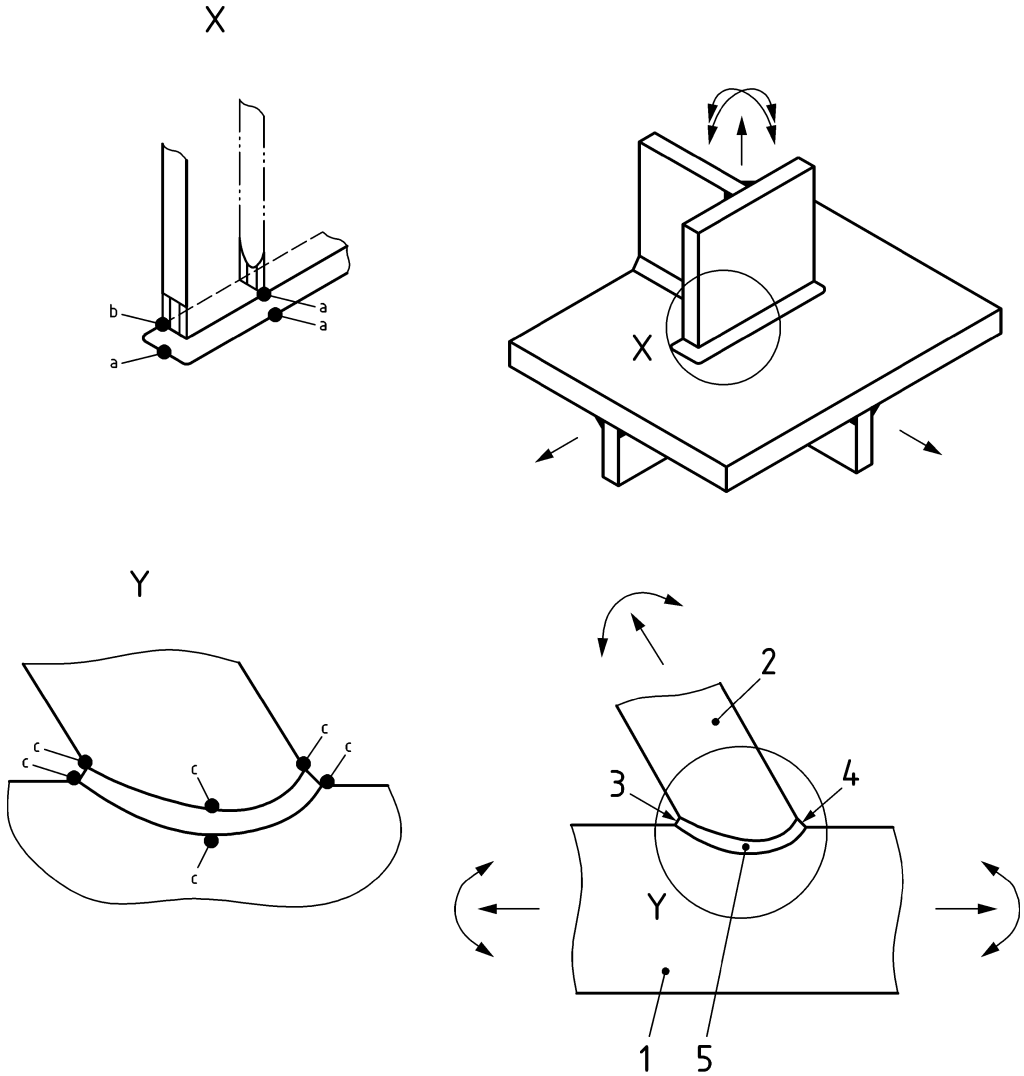

Key

1 Chord

2 Brace

3 Crown heel

4 Crown toe

5 Saddle

Figure B.1 — Definition of hot spot type “a”, “b” and “c”

(6) When calculating the hot spot stress type “c”, only the stress component perpendicular to the weld toe should be considered.

NOTE In case of hot spot type “a” and “b”, further guidance is given in B.3.2(6) to (8).

(7) For constructional details covered by Table B.1 and Table B.2, the stresses should be calculated as given in EN 1993-1-14.

B.3.2 Calculation of stress ranges

(1) The design value of the hot spot stress ranges $\Delta\sigma_{HS,Ed}$ should be determined from the load effect of the fatigue load model multiplied by the partial factor γ_{Ff}.

(2) For fatigue design situations where the fatigue action effect is defined by an equivalent stress range, the design value of the hot spot stress range $\Delta\sigma_{e,2,HS,Ed}$ should be determined as follows:

$$\Delta\sigma_{e,2,HS,Ed} = \lambda_1 \lambda_2 \ldots \lambda_n \Delta\sigma_{HS}(\gamma_{Ff} Q_{fat}) \quad \text{(B.1)}$$

where

$\Delta\sigma_{HS}(\gamma_{Ff} Q_{fat})$	is the design value of the hot spot stress range caused by the fatigue actions specified in EN 1991
λ_i	are damage equivalent factors depending on the spectra as specified in the relevant parts of EN 1993 and EN 1994, i = 1 to n

(3) For any other kind of stress range spectrum, the design value of each stress range $\Delta\sigma_{i,HS,Ed}$ in the spectrum should be determined in accordance with the method for $\Delta\sigma_{e,2,Ed}$ using A.3.2(2).

(4) In welded details which have been subjected to full thermal stress relief after all welding operations have been completed, the mean stress influence on the fatigue life may be taken into account by considering a reduced design value of each stress range in the design spectrum where part, or all, of the stress cycle is compressive as specified in 7.4.

(5) For calculation of hot spot stress range in hot spot types “a” and “b”, the principal stress range with the largest absolute stress difference should be used if its orientation is closer than $\alpha = \pm 45°$ from that of the normal to the weld line as shown in Figure B.2.

NOTE When the principal stresses have the same sign, the maximum principal stress range can be used.

(6) Stress σ_1 should be replaced by σ_2 in Figure B.2 case of a compressive nominal stresses in the plate.

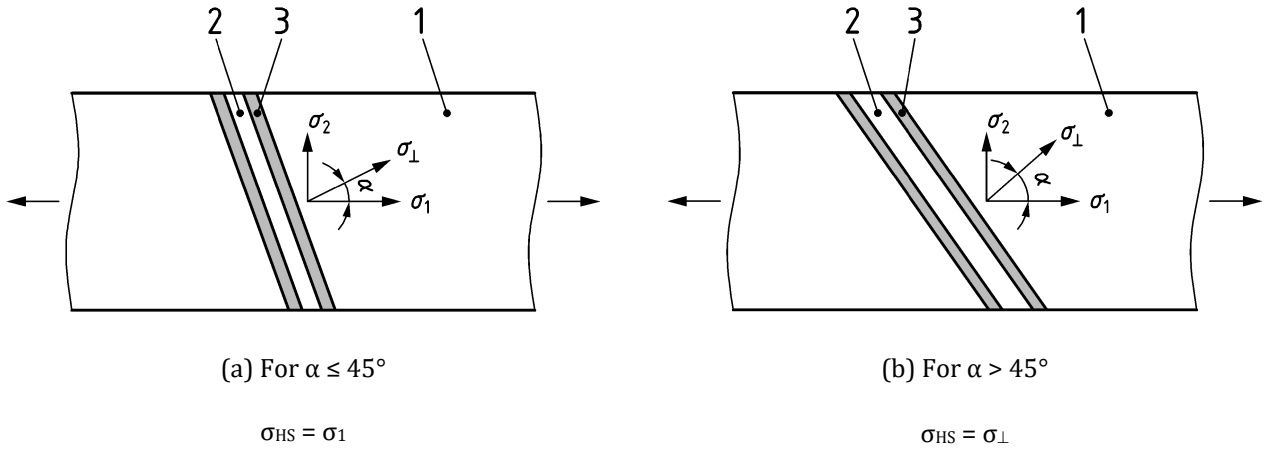

Key

σ_1 : first principal stress
σ_2 : second principal stress
$\sigma_\perp$: stress perpendicular to the weld toe
1 Main plate
2 Attached plate
3 Weld

Figure B.2 — Stress components for hot spot stress ranges, planar view of a plate surface (in case of biaxial stress, σ_1 and σ_2 can be time-dependent)

(7) Where the orientation of the principal stress with the largest absolute stress difference does not satisfy the requirement in (5) and (6), the normal stress component acting perpendicular to the weld line should be used. Other stress components (e.g. parallel to the weld line) should be checked using the nominal stress method.

(8) Paragraphs (5) to (7) should also be applied in situations where the directions of principal stresses change during the load cycle. In this case, the principal stress range should be determined as the greatest algebraic difference between principal stresses planes no more than 45° apart.

(9) The calculated hot spot stress range should consider misalignments that exceed the more onerous of the tolerances indicated in the detail category tables and EN 1090-2. In cases of eccentricities in joints, the nominal value of eccentricity should be used.

NOTE To account for macro-geometric effects not included in the hot spot detail category, the stress range can be calculated directly by a FE analysis or indirectly accounted for by means of magnification factor k_f that is available for different geometries in Annex D or in the literature. The hot spot stress range can be calculated considering only the extent of misalignment that exceeds the more onerous of the tolerances indicated in the detail category tables and EN 1090-2.

B.4 Fatigue resistance

B.4.1 Fatigue resistance curves

(1) The characteristic fatigue resistance curves for hot spot stress ranges in Figure B.3 should be used for details in plated structures and for details in sections, and combinations of sections. The characteristic fatigue resistance curves for hot spot stress ranges in Figure B.4 should be used for lattice girder joints made of structural hollow sections .

NOTE Further information on resistance curves for lattice girder joints made of structural hollow sections can be found in ISO 14347.

(2) The fatigue resistance curves for hot spot stress ranges under constant and variable amplitude loading should be determined in accordance with the recommendation in 8.2(1).

NOTE A summary of the characteristic fatigue resistance values can be found in Annex A.

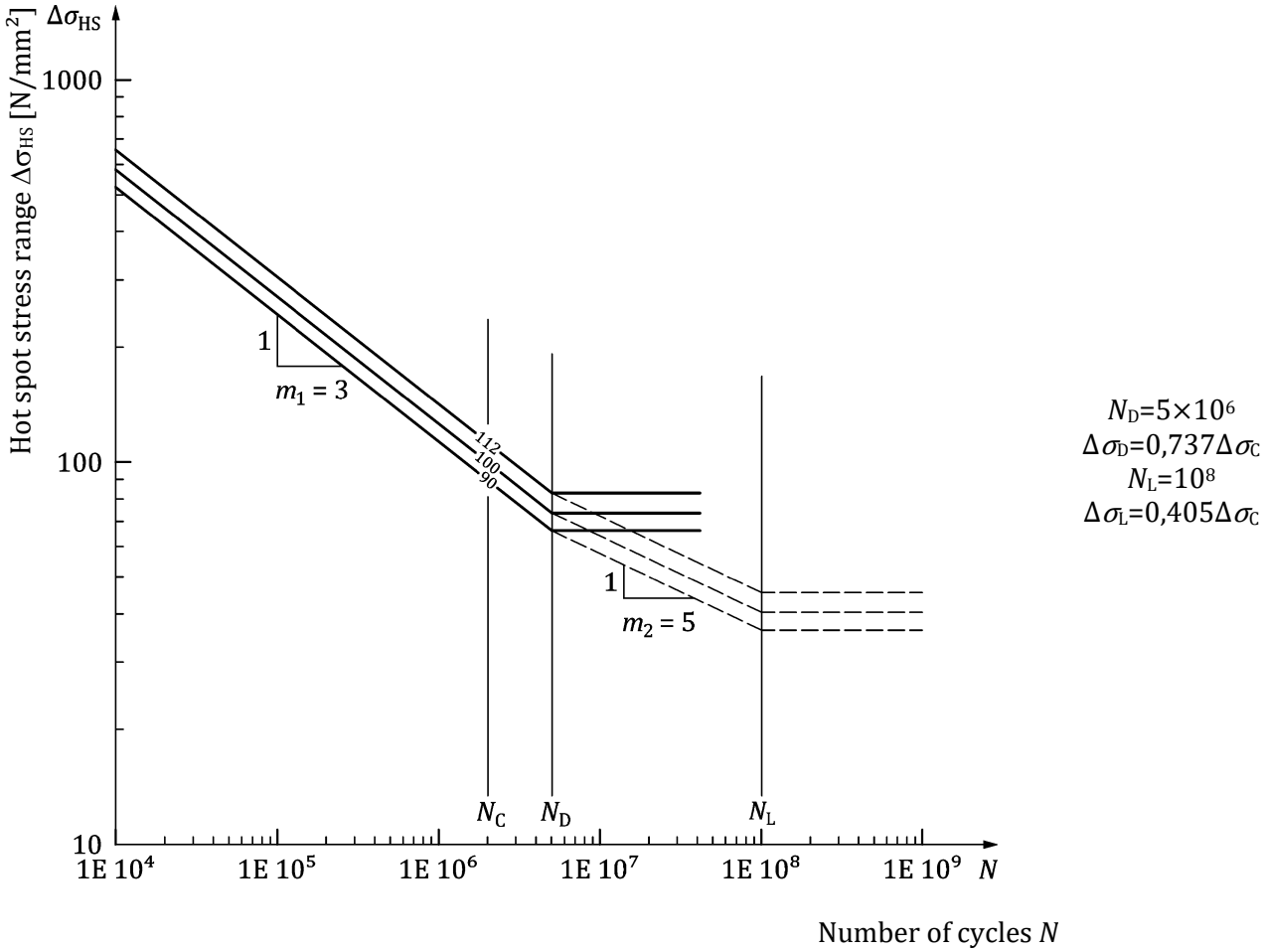

$\Delta\sigma_{HS,D} = 0{,}737\Delta\sigma_{HS,C}$ $\Delta\sigma_{HS,L} = 0{,}405\Delta\sigma_{HS,C}$ (values are given in Table A.2)

$N_C = 2\times10^6$ cycles, $N_D = 5\times10^6$ cycles, $N_L = 10^8$ cycles

Figure B.3 — Characteristic fatigue resistance curves for hot spot stress ranges in conjunction with Table B.1, types “a” and “b”

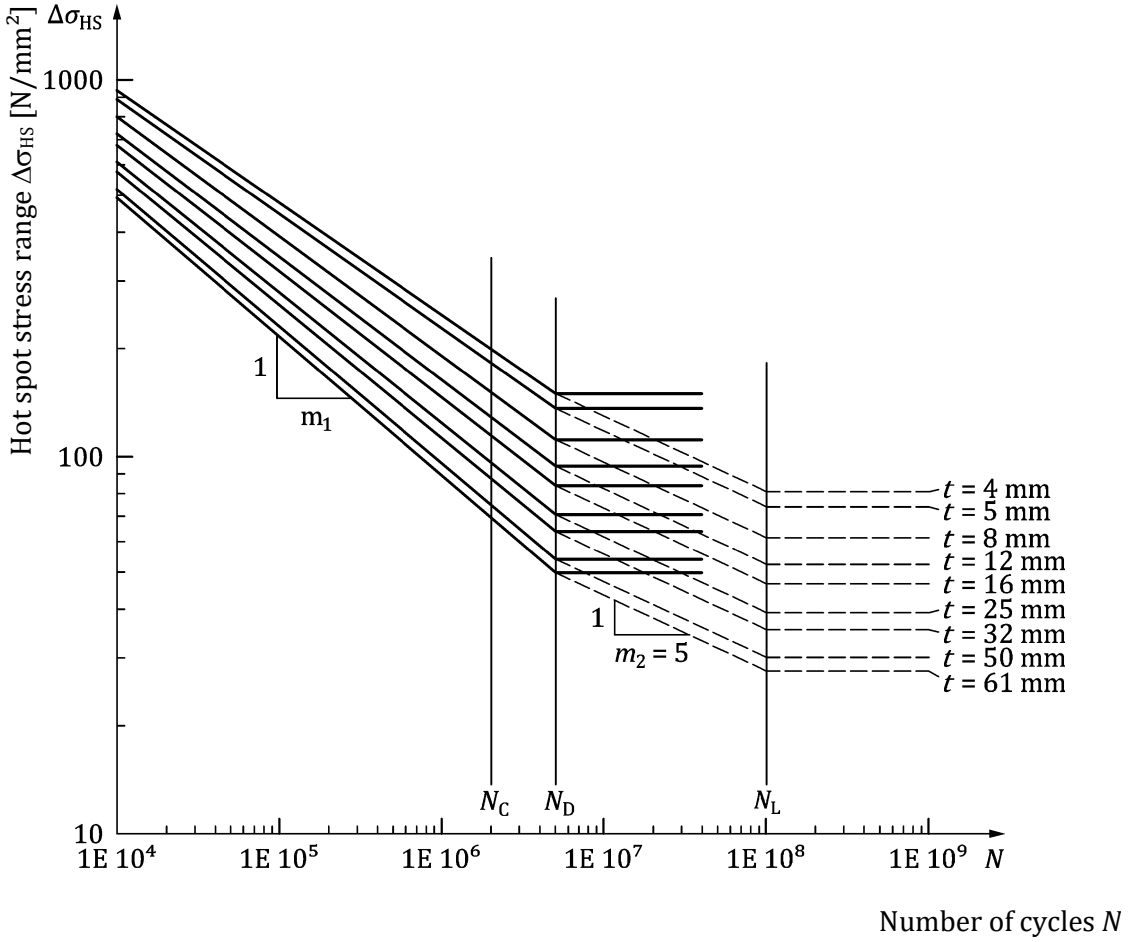

$\Delta\sigma_{HS,D}$, $\Delta\sigma_{HS,L}$: values are given in Table A.2

$N_C = 2\times10^6$ cycles, $N_D = 5\times10^6$ cycles, $N_L = 10^8$ cycles

Figure B.4 — Characteristic fatigue resistance curves for hot spot stress ranges in conjunction with Table B.2 (type "c", lattice girder joints made of structural hollow sections)

B.4.2 Classification of constructional details

(1) For the application of the hot spot stress method, constructional details should be classified in accordance with the following tables:

- Table B.1 for details with potential fatigue cracks at the weld toes of:
  - butt welds,
  - fillet welded attachments,
  - fillet welds in cruciform joints.
- Table B.2 for details with cracks at weld toes of lattice girder joints made of structural hollow sections.

NOTE The hot spot stress reference detail method can be used as an alternative to classify a constructional detail. Further guidance is given in Annex G.

(2) The classifications of fillet welded details may be applied to convex, concave or flat weld caps, although the illustrations only show one indicative weld profile type.

Table B.1 — Detail categories for use with hot spot stress method, types “a” and “b”

Detail category	β[1)]	Constructional detail	Weld symbol	Description	Supplementary Requirements
112	0,1	① 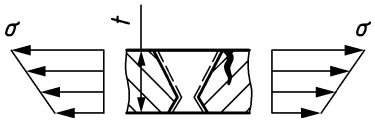		① Full penetration butt joint, welded from both sides, ground flush. Only for evaluation of misalignment effects	Weld all-around ground flush to plate surface in direction of stress, where relevant, after removing weld run-off pieces Misalignment due to fabrication to be neglected if ≤ 5% of plate thickness, see also B.3.2(9).
100	0,2	② 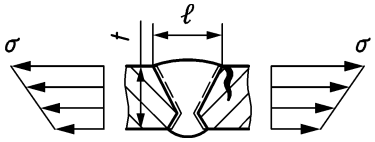		② Full penetration butt joint, welded from both sides, In case of butt-welded splices in structural hollow sections, welded from one side.	Fabrication: Welding position PA. Smooth transition of weld to plate surface Plate edges ground parallel to direction of stress, where relevant, after removing weld run-off pieces Misalignment due to fabrication to be neglected if ≤ 5% of plate thickness, see also B.3.2(9). Modelling: FE model should include weld convexity of weld cap.
100	0,3	③ 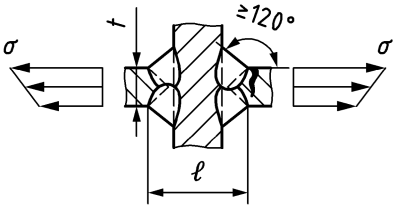		③ Cruciform joint with full penetration butt welds, welded from both sides	Weld flank angle ≥ 120°, see Note 2. The eccentricity of the load carrying plates due to fabrication to be neglected if ≤15% of the thickness of the intermediate plate, see also B.3.2(9)

Detail category	β[1)]	Constructional detail	Weld symbol	Description	Supplementary Requirements
90	0,3	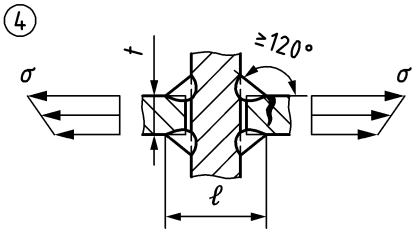		④ Cruciform joint with load-carrying partial penetration butt welds and fillet welds	Fabrication: Weld flank angle ≥ 120°, see Note 2. The eccentricity of the load carrying plates due to fabrication to be neglected if ≤15% of the thickness of the intermediate plate, see also B.3.2(9) Modelling: FE model with full connectivity between the plates independent of the weld type. For partial penetration butt welds or fillet welds, weld root failure should be checked using ③ of Tab. 10.6, see Note 3.
100	0,3	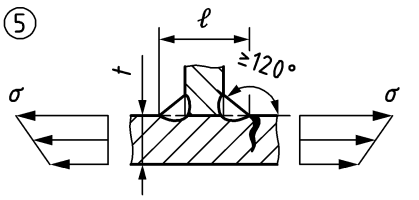		⑤ Non load-carrying fillet welds	Weld flank angle ≥ 120°.
100	0,3	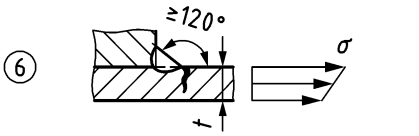		⑥ Cover plate ends and similar joints.	Weld flank angle ≥ 120°.
100	-	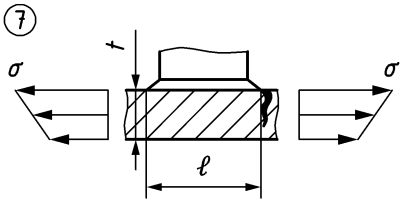		⑦ Type “b” joint with longitudinal attachment.	Fillet or full penetration weld.

[1)] The thickness correction only applies to hot spot type a, see B.4.3.

NOTE 1 Fatigue resistance curve with slope parameter m_1 = 3 unless otherwise stated in detail category

NOTE 2 For load carrying attachments with partial penetration butt welds or fillet welds, for weld sizes a > 0,7 t weld root failure should also be checked.

NOTE 3 Effective full penetration butt welds according to EN 1993-1-8 are considered as partial penetration butt welds in respect of fatigue.

Table B.2 — Detail categories for use with hot spot stress method for lattice girder joints made of structural hollow sections, type "c", including a thickness correction

Detail category	Thickness t[1] [mm]	Constructional detail	Requirements
193 m_1=3,36	4	① CHS and RHS joints	①, ② and ③ Stop-starts for non-continuous welds should not be located at points of high stress concentration. ② and ③ Partial or full penetration welds are recommended. Fillet welds only if $a \geq t$ and if local dihedral angle at the intersection between the brace and the chord surfaces does not exceed 120°. For further guidance, see ISO 14347.
178 m_1=3,30	5		
149 m_1=3,17	8		
128 m_1=3,07	12	② CHS and RHS joints	
114 m_1=3,00	16		
97 m_1=2,90	25	③ CHS joints	
88 m_1=2,85	32		
74 m_1=2,75	50		
69 m_1=2,72	61		

[1] The thickness of the member, brace or chord, in which the potential crack develops.

NOTE Fatigue resistance curves have variable slopes, Figure B.4 and Formulae (B.2) and (B.3).

B.4.3 Fatigue resistance modification

(1) For hot spot type "a", where the plate or wall thickness is greater than the reference thickness, the stress range should be modified by the application of a thickness factor that should be determined as follows:

$$k_s = \left(\frac{t_{\text{ref}}}{t_{\text{eff}}}\right)^{\beta} \text{ for } t > t_{\text{ref}} \tag{B.2}$$

where:

t_{ref} reference thickness equal to 25mm for plated structures and for details in sections and combinations of sections. For structural hollow sections (details with geometries as in Table 10.7 only), the reference thickness is 16mm

t thickness of element through which a potential crack can develop

β thickness exponent on fatigue resistance.

t_{eff} effective thickness

(2) The effective thickness for details of Table B.1 should be calculated as follows:

- For details 1 and 6: $t_{\text{eff}} = \text{t}$
- For details 2, 3, 4, 5: $t_{\text{eff}} = \min\ (14 + 0{,}66\ell; t)$ for $t_{\text{eff}} \geq t_{\text{ref}}$ (B.3)where the parameters where the parameters t_{eff}, ℓ and t are measured in mm and ℓ and t are defined in Table B.1 and Figure B.5.

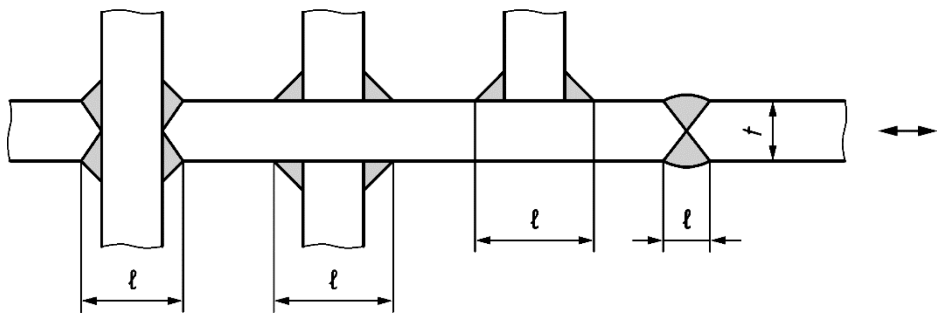

Figure B.5 — Definition of attachment length in details 3, 4, 5 and weld width in details 1, 2 of Table B.2.

B.5 Fatigue verification

(1) Within a constructional detail with different potential crack locations, fatigue verification may require the use of different design stress methods. In those cases, each fatigue verification shall be made with reference to the value of the fatigue resistance relevant for that method.

NOTE For example, potential weld root cracking under shear stresses is verified according to the nominal stress method, while potential weld toe cracking under normal stresses is verified according to the hot spot stress method of this annex.

(2) For verification with the equivalent constant stress range $\Delta\sigma_{\text{e,2,HS,Ed}}$, the hot spot stress range of a constructional detail should satisfy following relationship:

$$\frac{\Delta\sigma_{\text{e,2,HS,Ed}}}{\Delta\sigma_{\text{HS,C}}/\gamma_{\text{Mf}}} \leq 1{,}0 \qquad \text{(B.4)}$$

(3) Where no data for $\Delta\sigma_{\text{e,2,HS,Ed}}$ is available the verification format in Annex A may be used.

(4) An infinite life for constructional details may be assumed if the maximum stress range of the applied hot spot stress spectrum $\Delta\sigma_{\text{max,HS,Ed}}$ satisfies following relationship:

$$\frac{\Delta\sigma_{\text{max, HS,Ed}}}{\Delta\sigma_{\text{HS,D}}/\gamma_{\text{Mf}}} \leq 1{,}0 \qquad \text{(B.5)}$$

Annex C
(normative)

Effective notch stress method

C.1 Use of this annex

(1) This normative annex contains additional provisions to 6.1(3) for the determination of fatigue load effects and corresponding fatigue resistances for the verification of welded constructional details using the effective notch stress method.

C.2 Scope and field of application

(1) This normative annex applies to welded constructional details with potential crack location at the weld toe or the weld root.

NOTE Guidance on the calculation of effective notch stress using FE analysis is given in EN 1993-1-14.

(2) This normative annex only covers welded constructional details with plate thicknesses $t \geq 5$ mm.

(3) This normative annex does not cover fatigue verification of parent metal away from weld toes or of welded details with mild notches.

NOTE A mild notch is one for which the effective notch stress is less than 2 times the nominal stress. This can e.g. be the case in transverse butt welds with small or no weld convexity and small eccentricity.

(4) This normative annex does not cover fatigue verification of welded details with potential crack locations at the root or inner weld imperfections respecting the weld quality levels given in 8.2(2).

(5) This normative annex supplements and/or modifies the provisions according to Clause 9 and Annex A for the effective notch stress method.

NOTE The national annex can give conditions for the application of the methods given in this annex. It can give guidance on which method takes priority when the fatigue verification of a classified constructional detail by another method gives a different result.

C.3 Fatigue action effect

C.3.1 Stresses from fatigue action

(1) The effective notch stress should be calculated assuming linear-elastic material behaviour and an idealized weld geometry.

(2) Butt welds should be modelled with a weld toe angle of $\theta = 30°$, see Figure C.1. Fillet welds should be modelled with a weld toe angle of $\theta = 45°$. The cases designed for other angles should be modelled with the nominal values of these angles.

NOTE The weld toe angle θ can be calculated as the complementary angle of the weld toe flank angle.

(3) The effective notch stress should be obtained by rounding the weld toe or root with a notch of radius, $r = 1$ mm, see Figure C.1.

NOTE Guidance on the rounding of the weld toe and root is given in EN 1993-1-14.

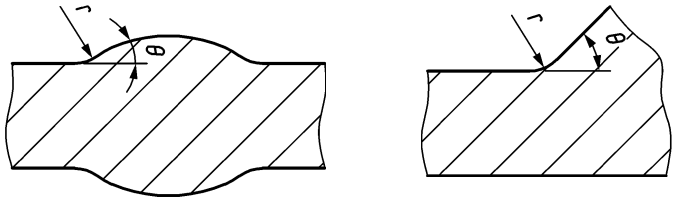

a) Rounding of a butt weld b) Rounding of a fillet weld

Figure C.1 — Weld toe angle and rounding of weld toe for different types of welded details

C.3.2 Calculation of stress ranges

(1) The design value of the effective notch stress ranges $\Delta\sigma_{ENS,Ed}$ should be determined considering the load effect from the fatigue load model multiplied by the partial factor γ_{Ff}.

(2) For fatigue design situations where the fatigue action effect is defined by an equivalent stress range, the design value of the effective notch stress range, $\Delta\sigma_{e,2,ENS,Ed}$, should be determined as follows:

$$\Delta\sigma_{e,2,ENS,Ed} = \lambda_1 \lambda_2 \lambda_i \ldots \lambda_n \Delta\sigma_{ENS}(\gamma_{Ff} Q_{fat}) \quad \text{(C.1)}$$

where:

$\Delta\sigma_{ENS}(\gamma_{Ff} Q_{fat})$ is the design value of the effective notch stress range caused by the fatigue actions specified in EN 1991

λ_i are damage equivalent factors depending on the spectra as specified in the relevant parts of EN 1993 and EN 1994, i = 1 to n

(3) For any other kind of stress range spectrum, the design value of each stress range $\Delta\sigma_{i,ENS,Ed}$ in the spectrum should be determined in accordance with the method for $\Delta\sigma_{e,2,Ed}$ using 7.3.2(1) and the verification method of Annex A should be used.

(4) In welded details which have been subjected to full thermal stress relief after all welding operations have been completed, the mean stress influence on the fatigue life may be taken into account by considering a reduced design value of each stress range in the design spectrum where part, or all, of the stress cycle is compressive as specified in 7.4.

(5) The effective notch stress range may be calculated using either:

- Principal stress (PS), as the maximum difference of the principal stress range,
- Equivalent von Mises (EVM): as the maximum von Mises equivalent stress range calculated from the range of notch stress components.

(6) The calculated effective notch stress range should consider misalignments that exceed the more onerous of the tolerances indicated in the detail category tables and EN 1090-2. In cases of eccentricities in joints, the nominal value of eccentricity should be used.

NOTE To account for macro-geometric effects, the effective notch stress range can be calculated directly by a FE analysis or indirectly accounted for by means of stress concentration factor k_f that is available for different geometries in Annex D or in the literature. The effective notch stress range can be calculated considering only the extent of misalignment that can exceed the more onerous of the tolerances indicated in the detail category tables and EN 1090-2.

C.4 Fatigue resistance

C.4.1 Fatigue resistance curves

(1) The characteristic fatigue resistance curves for effective notch stress ranges in Figure C.2 should be used for details calculated using the PS or the EVM.

(2) The fatigue resistance curve under constant and variable amplitude loading should be determined in accordance with the principle for $\Delta\sigma$ using 8.1(1).

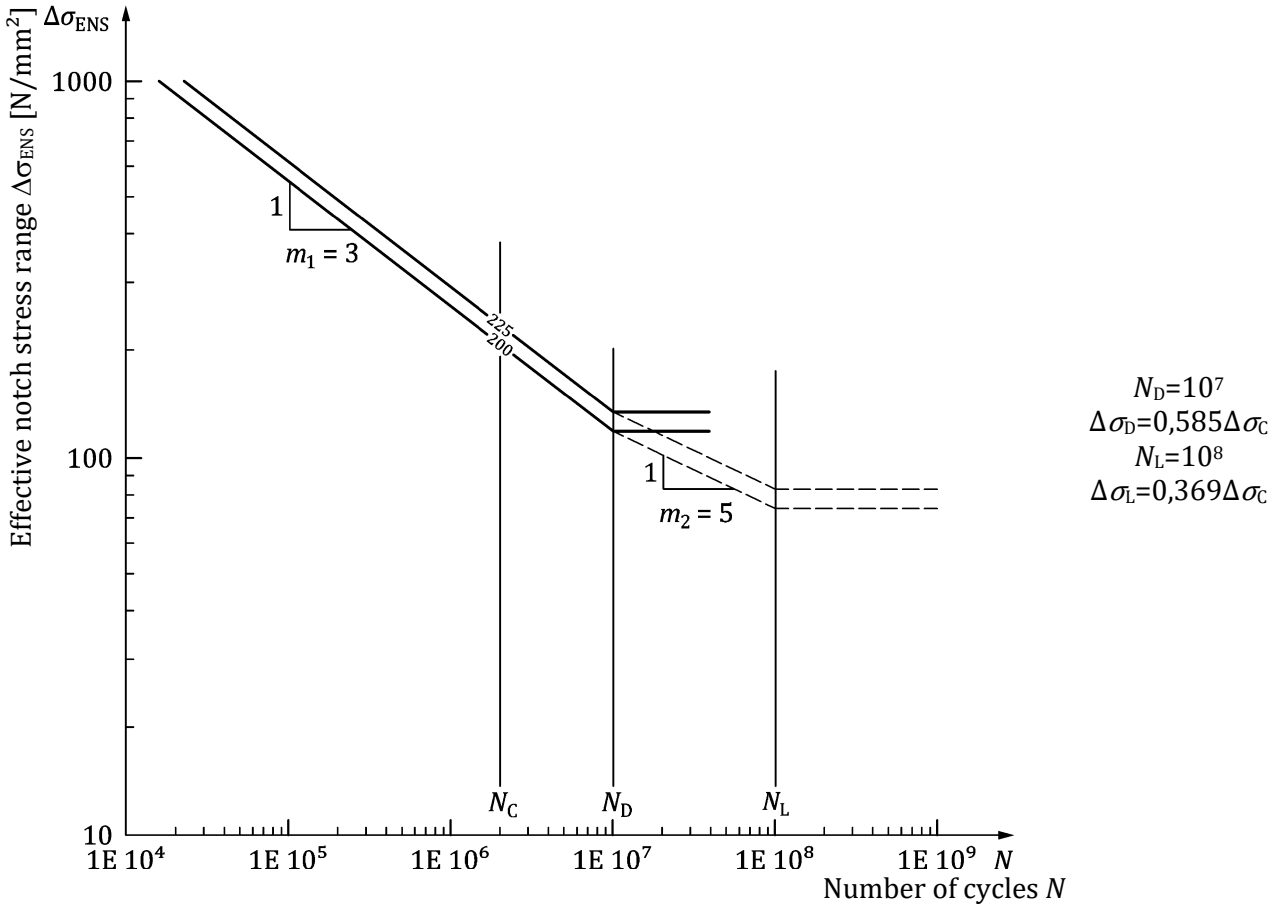

$\Delta\sigma_{ENS,D} = 0{,}585\Delta\sigma_{ENS,C}$ $\Delta\sigma_{ENS,L} = 0{,}405\Delta\sigma_{HS,C}$ (values are given in Table A.3)

$N_C = 2\times10^6$ cycles, $N_D = 10^7$ cycles, $N_L = 10^8$ cycles

Figure C.2 — Characteristic fatigue resistance curves for effective notch stress ranges (PS and VM methods)

C.4.2 Classification of constructional details

(1) The constructional detail categories in Table C.1 should be used with the effective notch stress ranges and the relevant calculation of stresses (with PS or EVM).

Table C.1 — Detail categories for use with effective notch stress method

Detail category	Constructional detail	Stress components / Description	Supplementary requirements
225	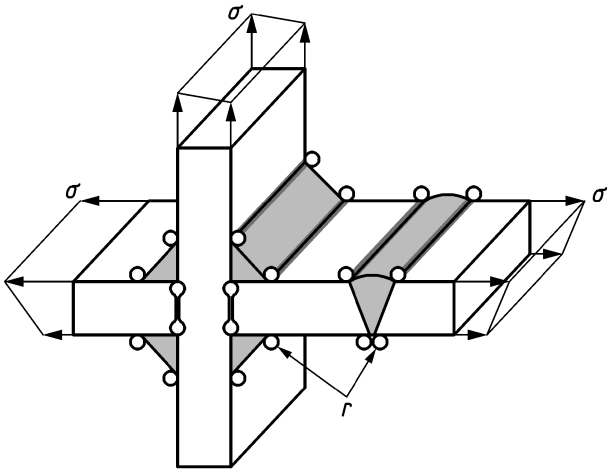	PS. Notch as-welded. Effective notch radius equal to 1mm replacing weld toe and weld root notch	For misalignment see C.3.2(6).
200		EVM. Notch as-welded. Effective notch radius equal to 1mm replacing weld toe and weld root notch	
NOTE Fatigue resistance curve with slope m_1 = 3			

C.5 Fatigue verification

(1) The equivalent constant effective notch stress range should be compared with the fatigue relevant resistance curve (PS or EVM).

(2) It should be checked that the fatigue resistance of the parent metal is not exceeded in the direct vicinity of the weld (e.g. using the nominal stress method and the fatigue strength relevant for that method).

(3) For verification with the equivalent constant stress range $\Delta\sigma_{e,2,ENS,Ed}$, the effective notch stress range of a constructional detail should satisfy following relationship:

$$\frac{\Delta\sigma_{e,2,ENS,Ed}}{\Delta\sigma_{ENS,C}/\gamma_{Mf}} \leq 1{,}0 \qquad \text{(C.2)}$$

(4) Where no data for $\Delta\sigma_{e,2,ENS,Ed}$ is available the verification format in Annex A may be used.

(5) An infinite life for constructional details may be assumed if the maximum stress range of the applied effective notch stress spectrum $\Delta\sigma_{max,ENS,Ed}$ satisfies following relationship:

$$\frac{\Delta\sigma_{max,ENS,Ed}}{\Delta\sigma_{ENS,D}/\gamma_{Mf}} \leq 1{,}0 \qquad \text{(C.3)}$$

Annex D
(informative)

Recommendations for magnification factors k_1 and stress concentration factors k_f

D.1 Use of this annex

(1) This informative annex provides supplementary guidance to 7.3.2 and 8.3 for magnification factors k_1 and stress concentration factors k_f.

NOTE National choice on the application of this informative annex is given in the national annex. If the national annex contains no information on the application of this informative annex, it can be used.

D.2 Scope and field of application

(1) This informative annex covers magnification factors k_1 and stress concentration factors k_f for the calculation of modified nominal stresses.

D.3 Secondary moments in lattice girders

(1) For lattice girders made of hollow sections the modelling may be based on a simplified truss model with continuous chords and pinned braces. Provided that the stresses due to external loading applied to members between joints are taken into account, the effects from secondary moments due to the stiffness of the connection may be considered by the use of k_1 factors according to:

- Table D.1 for circular hollow sections;
- Table D.2 for rectangular hollow sections;

where these sections are subject to the geometrical restrictions according to Table 10.8.

Table D.1 — k_1 factors for circular hollow sections under in-plane loading

Type of joint		Chords	Verticals	Diagonals
Gap joints	K type	1,5	–	1,3
	N type / KT type	1,5	1,8	1,4
Overlap joints	K type	1,5	–	1,2
	N type / KT type	1,5	1,65	1,25

Table D.2 — k_1 factors for rectangular hollow sections under in-plane loading

Type of joint		Chords	Verticals	Diagonals
Gap joints	K type	1,5	–	1,5
	N type / KT type	1,5	2,2	1,6
Overlap joints	K type	1,5	–	1,3
	N type / KT type	1,5	2,0	1,4

NOTE For the definition of joint types see EN 1993-1-8.

D.4 Flanges of ⌶-section girders with transitions in thickness or width

(1) For the details with transverse butt welds (details ⑱, ⑲, ⑳, ㉑ and ㉒ of Table 10.4, also Figure D.1 and Figure D.2) the recommended stress concentration factor k_f is defined as follows:

$$k_f = k_{f,N}\ k_{f,m} \tag{D.1}$$

where:

$k_{f,N}$ is the stress concentration factor for the plate membrane stress effect

$k_{f,m}$ is the stress concentration factor for the plate bending stress effect

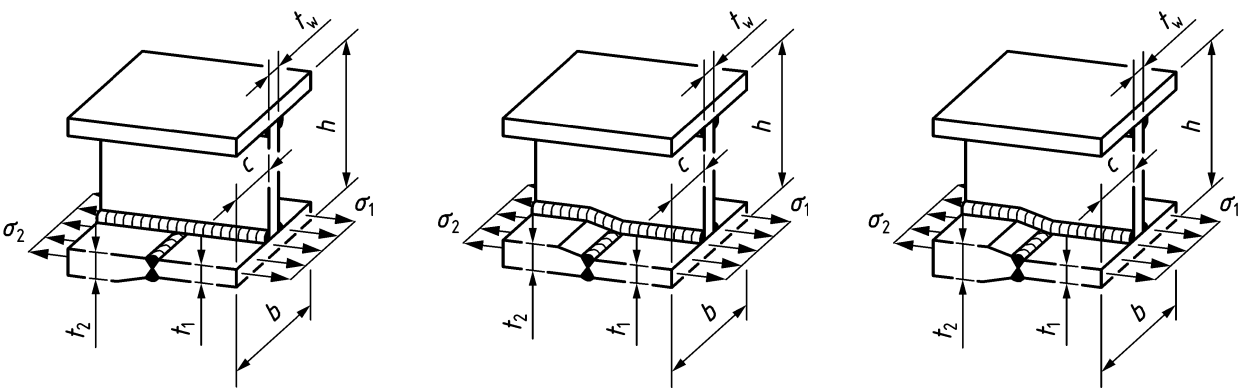

a) tapering to the outside b) tapering to the inside c) centric tapering (both sides tapered)

Figure D.1 — Flange thickness tapering in girders

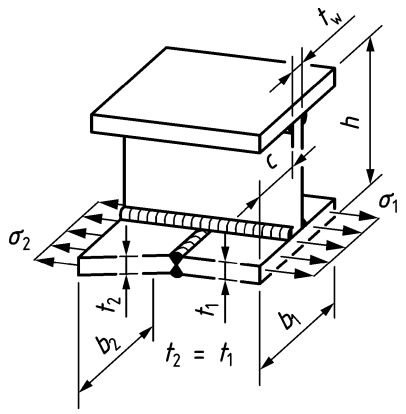

Figure D.2 — Flange width tapering in girders

(2) The stress concentration factor $k_{f,N}$ for the plate membrane stress effect is determined as follows:

- Details ⑱, ⑲, ⑳, ㉑ with thickness tapering to the outside or to the inside or with centric tapering (Figure D.1 a), b) and c)) and detail ㉒:

$$k_{f,N} = 1 + \alpha\ \left(\frac{\sigma_2\ t_2}{\sigma_1\ t_1} - 1\right) \tag{D.2}$$

where

$\alpha = 0{,}5$ for details ⑱, ⑲, ⑳, ㉑ with thickness tapering to the outside or with centric tapering and detail ㉒;

$\alpha = 0{,}33$ for details ⑱, ⑲, ⑳ and ㉑ with thickness tapering to the inside.

- Details ⑱, ⑲, ⑳ and ㉑ with width tapering (Figure D.2):

$$k_{\mathrm{f,N}} = 1 + 0{,}5\ \left(\frac{\sigma_2\ b_2}{\sigma_1\ b_1} - 1\right) \tag{D.3}$$

NOTE The stresses σ_1 and σ_2 are calculated along the centreline of the flanges. The resultant normal forces in the flanges are not identical due to the displacement of cross-section centroids.

(3) The stress concentration factor $k_{\mathrm{f,m}}$ for the plate bending stress effect, due to the eccentricity of the plates of the girders, should be determined as follows:

- Details ⑱, ⑲, ⑳, ㉑ with thickness tapering to the outside or to the inside (Figure D.1 a) and b)):

$$k_{\mathrm{f,m}} = \frac{1}{\beta}\ \left(1 + \frac{\lambda\left(\frac{t_2}{t_1} - 1\right)}{2\left(1 + \left(\frac{t_2}{t_1}\right)^n\right)}\right) \geq 1{,}0 \tag{D.4}$$

where:

$\beta = 1{,}25$ (recommended value)

$\lambda = 4 + (c/t_1)/10 \leq 6$

- Details ⑱, ⑲, ⑳, ㉑ with centric tapering (Figure D.1 c)), details ⑱, ⑲, ⑳, ㉑ with width tapering (Figure D.2) and detail ㉒:

$$k_{\mathrm{f,m}} = 1{,}0 \tag{D.5}$$

(4) The recommended stress concentration factors should only be applied if the following requirements for the throat weld between web and flange are fulfilled:

- Girders have no cope holes in the web in proximity of the transverse butt joint of the flange.

  NOTE For girders with cope holes the above recommended stress concentration factors do not apply.

- Where the change of normal forces in the flanges is not considered in the design of the longitudinal weld, longitudinal full penetration butt welds or double fillet welds with $a \geq t_w/2$ within a distance of 0,5 h on each side of the transverse butt weld are provided for.

  NOTE The change of normal force in the flange is $b\ (\sigma_2\ t_2 - \sigma_1\ t_1)$ for the cases covered by Figure D.1 and $(b_2\ \sigma_2\ t_2 - b_1\ \sigma_1\ t_1)$ for those covered by Figure D.2.

- Where the additional vertical stresses σ_z in the longitudinal weld are not considered in the design, longitudinal full penetration butt welds within a distance of 0,5 h on each side of the transverse butt weld are provided for.

  NOTE Additional vertical stresses σ_z can occur in cases with flange thickness tapering in girders to the inside (Figure D.1 a)) or to the outside (Figure D.1 b)).

D.5 Thickness transitions in plates

(1) For the details with transverse butt welds of plates with tapered thickness transitions and no vertical support of the plates (details ⑱, ⑲, ⑳, ㉑ of Table 10.4, also Figure D.3) the stress concentration factor k_f should be determined as follows:

$$k_f = \left(1 + \frac{6e}{t_1}\frac{t_1^{1,5}}{t_1^{1,5}+t_2^{1,5}}\right) \tag{D.6}$$

where

e is the eccentricity of centrelines.

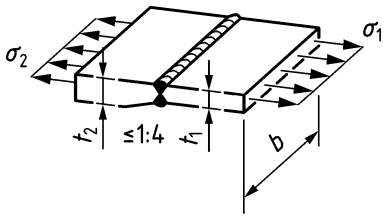

Figure D.3 — Tapered thickness transitions without vertical support of the plates

D.6 Shell structures

(1) Stress concentration factors for shell structures may be derived using prEN 1993-1-6.

Annex E
(informative)

Recommendations for preloaded bolts and rods subject to tension

E.1 Use of this annex

(1) This informative annex provides supplementary guidance to 7.2 on the principles of calculation of the forces (neglecting partial factors) in preloaded bolts and rods subject to tension.

NOTE National choice on the application of this informative annex is given in the national annex. If the national annex contains no information on the application of this informative annex, it can be used.

E.2 Scope and field of application

(1) This informative annex covers a simplified calculation method for preloaded bolts or rods under a centrically applied external tensile force in order to account for the beneficial influence of preloading under fatigue action effects.

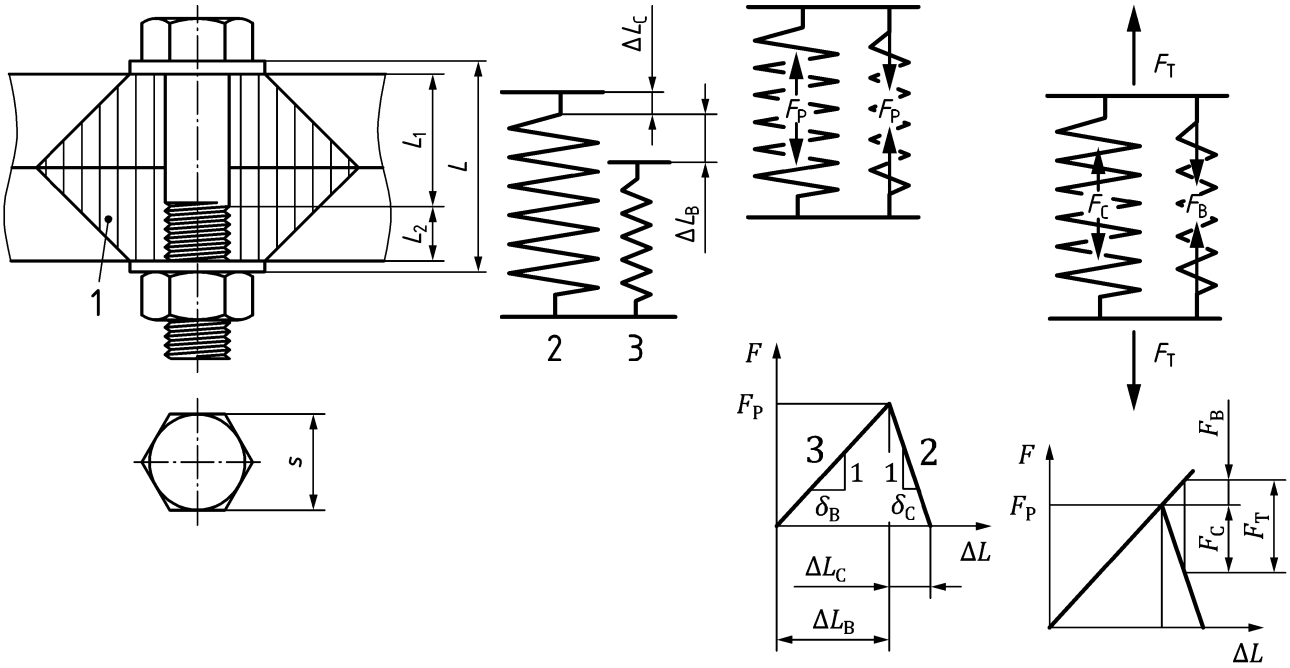

a) dimensions | b) spring model before preloading | c) spring model after preloading | d) spring model with forces due to external force

Key

1 volume of clamped components under compression due to preloading
2 spring representing stiffness of clamped components
3 spring representing stiffness of bolt or rod

Figure E.1 — Preloaded bolted joint

NOTE 1 The simplified calculation method using a spring model calculates the distribution of forces between bolt or rod and clamped components in a preloaded bolted joint or joint with rod under a centrically applied external tensile force, see Figure E.1 a). In the absence of an external force, due to the preloading of the joint, the clamped components are exposed to compression and the bolt to tension, see Figure E.1 c). If an external tensile force F_T is applied to the joint, it is distributed between the bolt or rod and the clamped components based on the ratio of elastic stiffness (inverse of flexibility) illustrated as springs in Figure E.1 b) to d). Due to the external force, the compression of the clamped components due to preloading reduces by F_C while the tensile force of the bolt or rod due to preloading increases by F_B, see Figure E.1 d). As the spring representing the clamped components has a greater stiffness it carries a relatively greater portion of the applied external force than the bolt or rod. This is favourable in cases where F_T is a fatigue action effect.

NOTE 2 EN 1993-1-14 can be used for a more accurate analysis based on finite elements.

E.3 Simplified calculation method

(1) For bolts or rods with preloading force $F_{P,c}$, the simplified calculation method may be taken into account provided that the following condition applies to the reduction of the compressive force F_C on the clamped components due to a external tensile force F_T centrally applied to the joint (Figure E.1 d)),

$$F_C \leq F_{P,c}, \tag{E.1}$$

where:

$F_{P.c}$ is the preloading force of the bolt or rod

F_C is the reduction of the compressive force of the clamped components due to F_T

F_T is the external tensile force applied to the preloaded bolted joint or joint with rod

(2) The additional tensile force F_B on the bolt or rod and the reduction of the compressive force F_C on the clamped components due to the external tensile force F_T may be determined as follows:

$$F_B = \frac{\delta_c}{\delta_b + \delta_c} F_T \tag{E.2}$$

$$F_C = \frac{\delta_b}{\delta_b + \delta_c} F_T \tag{E.3}$$

where:

δ_b is the flexibility of the bolt or rod

δ_c is the flexibility of clamped components

(3) The flexibility of the bolt or rod δ_b and the flexibility of the clamped components δ_c may be determined as follows (Figure E.1 a)):

$$\delta_b = \frac{L_1}{E\ (1{,}1 A_S)} + \frac{L_2}{E\ A} \tag{E.4}$$

$$\delta_c = \frac{L}{A_p\ E} \tag{E.5}$$

where:

L_1 is the bolt length without thread according to Figure E.1 a)

L_2 is the bolt length with thread according to Figure E.1 a)

L is the total thickness of clamped components including washers (Figure E.1 a))

A_S is the stress area of the bolt or rod according to EN 1993-1-8

A is the area of the shank of the bolt or rod

A_p is the base area of compressed volume of the clamped components due to preload (truncated cone)

(4) The base area of compressed volume of the clamped components (truncated cone in Figure E.1 a)) due to preload may be determined as follows:

$$A_p = \frac{\pi}{4}\left\{\left(s + \frac{L}{10}\right)^2 - d_0^2\right\} \tag{E.6}$$

where:

s is the width across flats (wrench size)

d_0 is the hole diameter of the bolt or rod

L is the total thickness of clamped components including washers (Figure E.1 a))

NOTE Instead of Formulae (E.4) and (E.5), more accurate bolt and plate assembly flexibilities δ_b and δ_c can be obtained according to VDI 2230 or using a model of the structure.

(5) Where bearing surfaces between clamped plates are not flat the effects of plate assembly flexibility should be taken into account.

NOTE Plate assembly flexibility can be determined according to VDI 2230 or using a model of the structure.

Annex F
(informative)

Fatigue design of welded joints subjected to High Frequency Mechanical Impact Treatment

F.1 Use of this annex

(1) This informative annex provides supplementary guidance to 6.1(3) and 8.4.2(1) for taking into account the High Frequency Mechanical Impact Treatment carried out on welded joints in the verification of the fatigue design situation.

NOTE The national choice on the application of this informative annex is given in the national annex. If the national annex contains no information on the application of this informative annex, it can be used.

F.2 Scope and field of application

(1) This informative annex applies to post-weld treatment of the constructional details in Table F.1 through qualified High Frequency Mechanical Impact (HFMI) technologies whose beneficial effect on the fatigue resistance may be taken into account for the fatigue verification.

NOTE 1 The covered constructional details are those with potential crack location at the weld toes in as-welded state. Therefore, a post-weld treatment of the weld toes affects the fatigue resistance beneficially.

NOTE 2 The applied stress ratio affects the behaviour of HFMI treated details.

(2) This informative annex covers qualified post-weld treatment technologies and the resulting improved fatigue resistances from such treatment.

NOTE 1 Qualified post-weld treatment technologies whose effectiveness has been proved by experimental research are (as listed in 3.1.4.13): HiFIT (High Frequency Impact Treatment), PIT (Pneumatic Impact Treatment), UIT (Ultrasonic Impact Treatment).

NOTE 2 Other treatment technologies do not fall in the scope of this annex unless the national annex gives different provisions.

(3) This informative annex covers improved fatigue resistance following the requirements for application given in F.6.

(4) This informative annex only covers welded constructional details with plate thicknesses $t \geq 5$ mm.

(5) This informative annex applies to steels covered by EN 1993-1-1; it does not apply to weathering steels according to EN 10025-5 and stainless steels according to EN 10088.

NOTE Conditions for the application on other steels and welded detail can be specified by the national annex.

(6) This informative annex applies for fatigue verification that is carried out according to the provisions given in Clause 9 and in Annex A.

Table F.1 — Constructional details

Design of the constructional detail	Weld symbol	Description
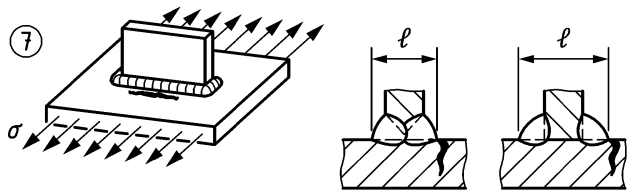 (not all cases presented)		Transverse stiffener Tab. 10.5, Details 7 to 10
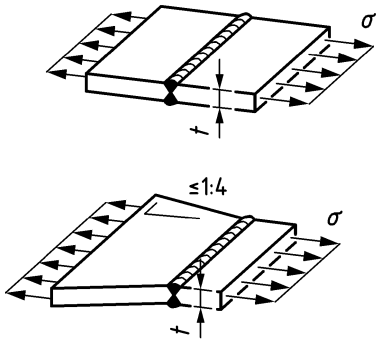 (not all cases presented)		Transverse butt weld Tab. 10.4, Details 2, 3, 19 and 22
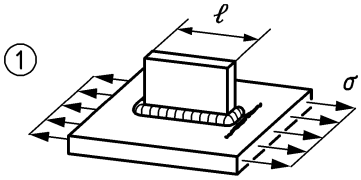 L = attachment length (not all cases presented)		Longitudinal stiffener Tab. 10.5, Details 1 and 2

F.3 Fatigue action effect

F.3.1 Stresses from fatigue actions

(1) The applied stresses should be calculated in accordance with the requirements in 7.1.

(2) The applied stresses should be calculated including the static load effects from the frequent combination of actions.

NOTE The fatigue resistance tables in F.4.2 contain limitations of applied stresses

F.3.2 Calculation of the stress ranges

(1) For fatigue design situations where the fatigue action effect is defined by an equivalent stress range, the design value of the nominal stress range $\Delta\sigma_{e,2,HFMI,Ed}$ should be determined as follows:

$$\Delta\sigma_{e,2,HFMI,Ed} = \lambda_1 \lambda_2 \ldots \lambda_n \lambda_{HFMI} \Delta\sigma (\gamma_{Ff} Q_{fat}) \quad \text{(F.1)}$$

and $\lambda_1 \lambda_2 \ldots \lambda_n \leq \lambda_{max}$

where:

$\Delta\sigma(\gamma_{Ff}\, Q_{fat})$ is the design value of the normal stress range caused by the simplified fatigue load model specified by EN 1991 (= $\sigma_{FLM,max} - \sigma_{FLM,min}$)

λ_i are damage equivalent factors depending on the spectra as specified in the relevant parts of EN 1993 and EN 1994, i = 1, 2, … , n

λ_{max} is the maximum λ-value taking into account of the fatigue limit, as specified in the relevant parts of EN 1993 and EN 1994

λ_{HFMI} is the factor to consider the mean stress effect in spectrum, see F.7

NOTE The national annex can give alternative methods to calculate $\Delta\sigma_{e,2,HFMI,Ed}$ or λ_{HFMI}. The following conservative value may be recommended λ_{HFMI} = 2,0.

(2) In case of fatigue action effect expressed as a load spectrum, the treatment of variable amplitude loading is given in F.7.

F.4 Fatigue resistance

F.4.1 Fatigue resistance curves

(1) The characteristic fatigue resistance curves in Figure F.1 should be used for HFMI treated details.

NOTE For numbers of cycles $N < 5\times10^6$, the improved fatigue resistance curve of HFMI treated constructional details has a slope parameter m_{HFMI} = 5. For numbers of cycles $5\times10^6 < N \leq 10^8$, the improved fatigue resistance curve of HFMI treated constructional details has a slope parameter $m_{HFMI,D}$ = 9 (Figure F.1).

(2) For stress range $\Delta\sigma_s$ and corresponding $N_{min,HFMI}$, the fatigue resistance curve for as-welded state and for HFMI treated state intersect in Figure F.1. The HFMI fatigue resistance curves should only be used for stress range below $\Delta\sigma_s/\gamma_{Mf}$ or number of cycles $N > N_{min,HFMI}$.

(3) For stress range above or equal to $\Delta\sigma_s/\gamma_{Mf}$ or for $N \leq N_{min,HFMI}$, the as-welded fatigue resistance should be used (no improvement of the fatigue resistance).

(4) The minimum cycles $N_{min,HFMI}$ and the related stress range $\Delta\sigma_s$ provided by Tables F.3, F.5 and F.7 should be used for the considered constructional details.

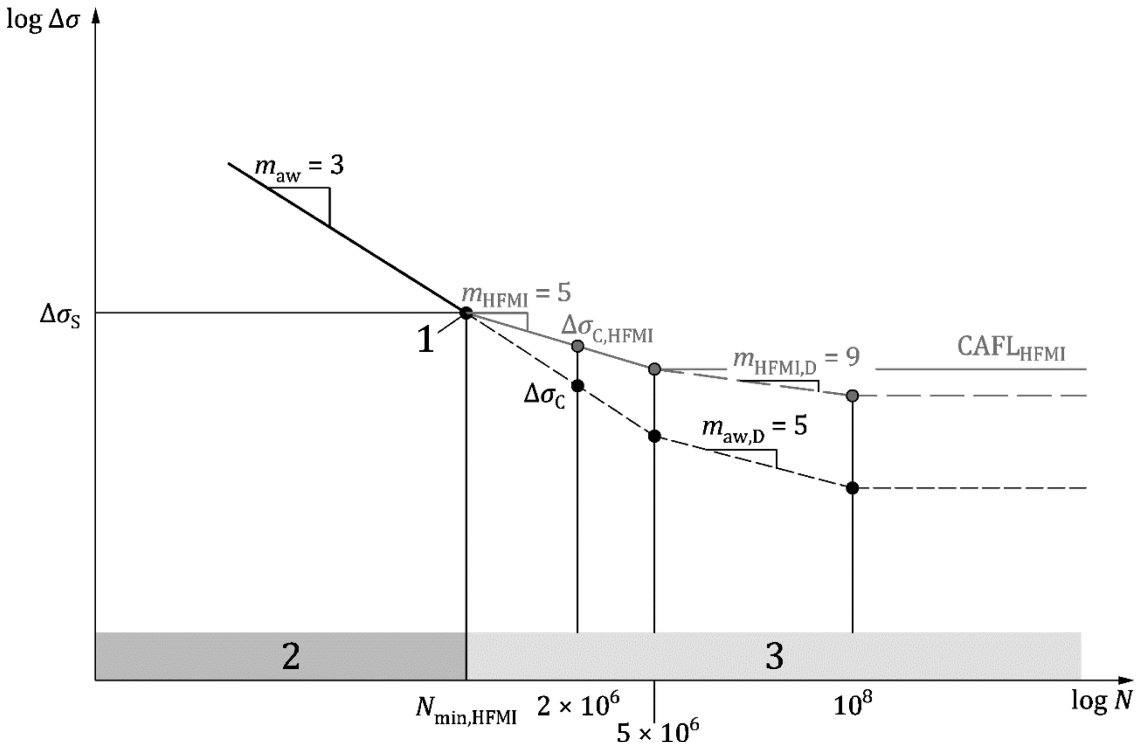

Key

1 Intersection (threshold)

2 No effect

3 Beneficial effect of HFMI treatment

Figure F.1 — Fatigue resistance curves for HFMI treated state

F.4.2 Classification of constructional details

F.4.2.1 General

(1) The detail category of HFMI treated details $\Delta\sigma_{HFMI,C}$ in Tables F.2, F.4 and F.6 that are dependent on steel grade f_y and stress ratio R may be used.

(2) As an alternative to the tabulated values given in Tables F.2, F.4 and F.6 the detail category of HFMI treated details $\Delta\sigma_{HFMI,C}$ may be calculated for any yield strength f_y and stress ratio R according to F.4.3.

(3) The steel grade is decisive for the detail category. It may be assumed that a reduction of the nominal yield strength depending on the material thickness does not affect the detail category.

NOTE The national annex can specify a reduction of the nominal yield strength in function of the material thickness.

(4) Linear interpolation may be used for stress ratios R different from those given in the tables unless the less favourable limit value is chosen.

F.4.2.2 Transverse stiffener

Table F.2 — Reference value of detail category of HFMI treated details $\Delta\sigma_{HFMI,C}$ of transverse stiffeners due to qualified HFMI treatments for the nominal stress method

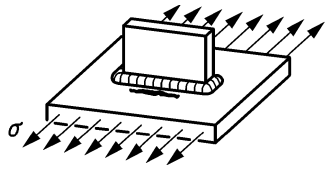	**Detail category**[a) c)]		
	Stress ratio R [-][b)]		
Steel grade according to EN 10025	-1,0	0,1	0,5
S235 ≤ S < S355	125	125	80
S355 ≤ S < S650	160	140	90
S650 ≤ S ≤ S700	160	160	125

[a)] Table applies for $\ell \leq 50$mm; if $50 < \ell \leq 80$mm, $\Delta\sigma_{C,HFMI}$ should be reduced by one fatigue detail category.

[b)] For other stress ratios R, linear interpolation is allowed.

[c)] Limitations of applied stresses calculated according to F.3.1 : $-0{,}7\, f_y < \sigma \leq f_y$

Table F.3 — Threshold for beneficial effect of HFMI treatment for transverse stiffeners (Figure F.1)

Transverse stiffener	Detail category		Threshold for beneficial effect of HFMI	
	As-welded	HFMI-treated	Maximum stress range	Minimum number of cycles
	$\Delta\sigma_C$ [N/mm²]	$\Delta\sigma_{HFMI,C}$ [N/mm²]	$\Delta\sigma_s$ [N/mm²]	$N_{min,HFMI}$ [-]
$50 < \ell \leq 80$mm	71	80	96	817100
		90	128	337800
		100	167	153250
		112	222	65500
		125	292	28750
		140	388	12300
		160	542	4500
$\ell \leq 50$mm	80	90	107	826600
		100	140	375000
		112	186	160300
		125	244	70350
		140	324	30100
		160	453	11050

F.4.2.3 Transverse butt weld

Table F.4 — Reference value of detail category of HFMI treated details $\Delta\sigma_{HFMI}$ of transverse butt welds without or with tapering in width or in thickness (slope ≤ 1:4) due to qualified HFMI treatments for the nominal stress method

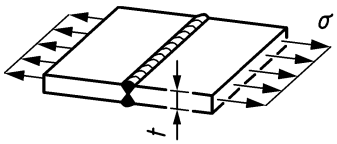	Detail category[b) c)]		
	Stress ratio R [-][a)]		
Steel grade according to EN 10025	-1,0	0,1	0,5
S235 ≤ S < S355	140	140	90
S355 ≤ S < S650	160	160	100
S650 ≤ S ≤ S700	160	160	140

[a)] For other stress ratios R, linear interpolation is allowed.

[b)] For t_{min} > 25mm, $\Delta\sigma_{C,HFMI}$ should be reduced by $k_s = (25/t_{min})^{0,2}$

[c)] Limitations of applied stresses calculated according to F.3.1: $-0,9\, f_y < \sigma \leq f_y$

Table F.5 — Threshold for beneficial effect of HFMI-treatment for transverse butt welds (Figure F.1)

Transverse butt weld	Detail category		Threshold for beneficial effect of HFMI-treatment	
	As-welded	HFMI-treated	Maximum stress range	Minimum number of cycles
	$\Delta\sigma_C$ [N/mm²]	$\Delta\sigma_{HFMI,C}$ [N/mm²]	$\Delta\sigma_s$ [N/mm²]	$N_{min,HFMI}$ [-]
$t \leq 25$mm[a)]	90	100	117	907200
		112	155	387900
		125	205	170200
		140	272	72750
		160	379	26750

[a)] For $t > 25$mm, $\Delta\sigma_{C,HFMI}$ should be reduced by $k_s = (25/t)^{0,2}$

F.4.2.4 Longitudinal stiffener

Table F.6 — Reference value of detail category of HFMI treated details $\Delta\sigma_{HFMI,C}$ of longitudinal stiffener due to qualified HFMI treatments for the nominal stress method

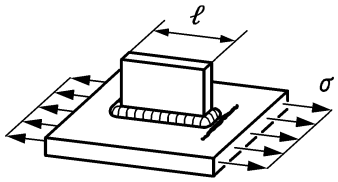

Steel grade according to EN 10025	Detail category[a),d) e)]		
	Stress ratio R [-][c)]		
	-1,0	0,1	0,5
S235 ≤ S < S355	b)	b)	b)
S355 ≤ S < S650	100	100	71
S650 ≤ S ≤ S700	125	125	80

[a)] Table is valid for any stiffener length.

[b)] No improved detail category due to missing data base.

[c)] For other stress ratios R, linear interpolation is allowed.

[d)] For longitudinal stiffener in pure bending, the detail category of HFMI-treated details $\Delta\sigma_{HFMI,C}$ should be reduced by one detail category.

[e)] Limitations of applied stresses calculated according to F.3.1: $-0,5\, f_y < \sigma \leq f_y$

Table F.7 — Threshold for beneficial effect of HFMI treatment for longitudinal stiffener (Figure F.1)

Longitudinal stiffener	Detail category		Threshold for beneficial effect of HFMI-treatment	
	As-welded $\Delta\sigma_C$ [N/mm²]	HFMI-treated $\Delta\sigma_{HFMI,C}$ [N/mm²]	Maximum stress range $\Delta\sigma_s$ [N/mm²]	Minimum number of cycles $N_{min,HFMI}$ [-]
ℓ > 100mm[a)]	63	80	114	333400
		90	154	137800
		100	200	62500
		112	265	26700
		125	349	11750
[a)] See footnote 1 of Table F.6				

F.4.3 Alternative formulae for determination of detail category

(1) As an alternative to the tabulated values given in Tables F.2, F.4 and F.6 the detail category of HFMI treated details $\Delta\sigma_{HFMI,C}$ may be calculated for any yield strength f_y and stress ratio R using the fatigue resistance in these tables for S355 and R = 0,1 as a reference value modified as follows:

$$\Delta\sigma_{HFMI,C} = f_1 \cdot f_2 \cdot \Delta\sigma_{HFMI,C,ref} \quad \text{(F.2)}$$

where:

$\Delta\sigma_{HFMI,C}$ is the detail category of HFMI treated detail of any yield strength f_y and any stress ratio R;

$\Delta\sigma_{HFMI,C,ref}$ is the detail category for same detail with f_y = 355 N/mm² and R = 0,1 as specified in Tables F.2, F.4 and F.6;

f_1 is the modification factor accounting for the effect of yield strength f_y determined as follows:

$$f_1 = 1 + \frac{0{,}1(f_y - 355)}{\Delta\sigma_{HFMI,C,ref}} \quad \text{(F.3)}$$

f_2 is the modification factor accounting for the effect of stress ratio R determined as follows:

$$f_2 = \frac{1}{0{,}5R^2 + 0{,}95R + 0{,}9} \quad \text{if } 0{,}1 < R < 1{,}0, \quad \text{otherwise } f_2 = 1{,}0 \quad \text{(F.4)}$$

(2) When calculating the modification factor f_1, the nominal value for yield strength f_y may be used without correction for plate thickness.

F.4.4 Fatigue resistance modification

(1) A thickness correction may be neglected since it is already included in Tables F.2, F.4 and F.6.

(2) The correction for steel grade f_y and the stress ratio R should be made according to F.4.2 to F.4.4.

F.5 Fatigue verification

(1) For verification with the equivalent constant stress range $\Delta\sigma_{e,2,HFMI,Ed}$, , the nominal stress ranges from HFMI treated constructional details should satisfy the following relationship:

$$\frac{\Delta\sigma_{e,2,HFMI,Ed}}{\Delta\sigma_{HFMI,C}/\gamma_{Mf}} \leq 1{,}0 \tag{F.5}$$

(2) Stress components that are not perpendicular to the HFMI treated weld toe shall be verified in accordance with the procedures for welded details according to Clause 9.

(3) Where no data for $\Delta\sigma_{e,2,HFMI,Ed}$ is available the calculation should be made in accordance with F.7.

(4) An infinite life for constructional details may be assumed if the maximum stress range of the applied nominal stress spectrum $\Delta\sigma_{max,HFMI,Ed}$ satisfies following relationship:

$$\frac{\Delta\sigma_{max,HFMI,Ed}}{\Delta\sigma_{HFMI,D}/\gamma_{Mf}} \leq 1{,}0 \tag{F.6}$$

(5) In case of the combination of normal and shear stresses, the fatigue verification should consider their combined effects by adding the components of damage according to Miner's summation with respect to cracking at weld toe subjected to nominal normal stress ranges $\Delta\sigma_x$, $\Delta\sigma_y$, $\Delta\sigma_z$ and nominal shear stress ranges $\Delta\tau_{xy}$, $\Delta\tau_{xz}$, $\Delta\tau_{yz}$:

$$\sum_{j=x,y,z}\left(\frac{\Delta\sigma_{j,e,2,Ed}}{\Delta\sigma_{j,C}/\gamma_{Mf}}\right)^{m_\sigma} + \sum_{k=xy,xz,yz}\left(\frac{\Delta\tau_{k,e,2,Ed}}{\Delta\tau_{k,C}/\gamma_{Mf}}\right)^{m_\tau} \leq 1{,}0 \tag{F.7}$$

where:

m_σ is the first slope parameter m_1 of the fatigue resistance curve for the considered constructional detail under normal stress loading

m_τ is the first slope parameter m_1 of the fatigue resistance curve for the considered constructional detail under shear stress loading

$\Delta\sigma_{x,C}$ corresponds to the detail category for stresses acting perpendicularly to the weld toe of HFMI treated details $\Delta\sigma_{HFMI,C}$

(6) Where normal and shear stresses may cause the formation of fatigue cracks at different locations, a separate fatigue verification for both locations should be performed.

F.6 Requirements for application

F.6.1 Requirements for welds before HFMI treatment

(1) The requirement from the original detail category tables for a detail before HFMI treatment should be met.

(2) The weld toes to be treated shall be accessible for treatment.

(3) The post-weld treatment that change the weld toe geometry should not be applied before HFMI treatment.

NOTE Such treatments are grinding, TIG welding and vibration method [9].

(4) Cleaning of the welds (e.g. removal of weld spatter) to comply with quality requirements of EN 1090-2 is permitted. The weld toes to be treated should be visible after cleaning.

F.6.2 Requirements for welds after HFMI treatment

(1) Any further post-weld treatment should not be applied after HFMI treatment (e.g. grinding, TIG welding, stress relief treatment, vibration method [9]).

NOTE The beneficial effect of HFMI treatment is mainly based on the introduction of compressive residual stresses. These stresses can be relieved by a further post-weld treatment afterwards.

(2) Blast cleaning for surface preparations for corrosion protection is permitted.

(3) Thermal treatments to straighten welded components is not permitted.

(4) Hot dip galvanizing of HFMI treated constructional details is not permitted.

(5) The limitations in Formula (9.3) should also be satisfied during manufacturing and assembly.

F.6.3 Quality control

(1) HFMI treatments should only be performed by trained and qualified operators.

(2) The qualification of operators should be based on suitable training related to the device manufacturer.

NOTE Guidance on training can be found in the literature [4],[9],[10].

(3) For HFMI treatment, a visual inspection of HFMI treatment (trace of indentation) should be carried out by the operator and welding supervisor (extent of inspection: 100%). It should be ensured that the relevant weld toes have been completely treated and that the original weld toe notches have been entirely removed.

NOTE Guidance on visual inspection of HFMI treated details can be found in the literature [4],[9],[10].

(4) The HFMI treated sections should be marked in the constructional execution documents.

F.7 Treatment of variable amplitude loading

(1) When using the design spectrum, the applied stress range $\Delta\sigma_i$ should be multiplied by γ_{Ff} and the fatigue resistance $\Delta\sigma_{\mathrm{HFMI,C}}$ divided by γ_{Mf}. Annex A provides fatigue verification formats for fatigue action effect expressed as a stress range spectrum.

(2) For HFMI treated details subject to variable amplitude loading where the mean stress (or stress ratio R) for each stress range is known, the design value of a modified equivalent stress range that accounts for the mean stress effect may be determined as follows:

$$\Delta\sigma_{\mathrm{eq,R,Ed}} = \sqrt[5]{\frac{\sum\left(n_i\left(\Delta\sigma_{i,Ed}/f_{2,i}\right)^5\right)}{\sum n_i}} \tag{F.6}$$

where:

$f_{2,i}$ is the modification factor for stress ratio effect for the cycle i calculated acc. to Formula (F.4)

$\Delta\sigma_{i,Ed}$ is the stress range for the ith stress in the spectrum (design values)

n_i is the number of cycles associated with the stress range $\Delta\sigma_{i,Ed}$.

(3) The design value of the equivalent stress range at 2×10^6 cycles $\Delta\sigma_{\mathrm{e,2,HFMI,Ed}}$ may be determined as follows:

$$\Delta\sigma_{\mathrm{e,2,HFMI,Ed}} = \frac{\sum n_i}{2\times10^6}\Delta\sigma_{\mathrm{eq,R,Ed}} \tag{F.7}$$

where

$\sum n_i$ is the total number of cycles of the spectrum.

(4) The detail category to be used in fatigue verification based on $\Delta\sigma_{\mathrm{eq,R,Ed}}$ should be determined as follows:

$$\Delta\sigma_{\mathrm{HFMI,C}} = f_1\ \Delta\sigma_{\mathrm{HFMI,C,ref}} \tag{F.8}$$

(5) When using an equivalent stress range based on a simplified fatigue load model of EN 1991 and appropriate λ-values, the factor to consider the mean stress effect in spectrum, λ_{HFMI}, may be determined as follows:

$$\lambda_{\mathrm{HFMI}} = \frac{\Delta\sigma_{\mathrm{eq,R,Ed}}}{\Delta\sigma_{\mathrm{eq,Ed}}} \quad \text{but} \quad 1{,}0 \ \leq \lambda_{\mathrm{HFMI}} \leq 2{,}0 \tag{F.9}$$

where:

$\Delta\sigma_{\mathrm{eq,R,Ed}}$ is the modified equivalent stress range that accounts for the mean stress effect according to Formula (F.6)

$\Delta\sigma_{\mathrm{eq,Ed}}$ is the design value of the equivalent stress range acc. to Formula (F.6) but setting $f_{2,i}$ = 1,0

NOTE More guidance can be found in ref. [3], including values for λ_{HFMI}, in case of road bridges.

Annex G
(informative)

Hot spot stress reference detail method

G.1 Use of this annex

(1) This informative annex provides complementary guidance to B.4.2(1) to the application the hot spot stress method for fatigue verification using a reference detail.

NOTE The national choice on the application of this informative annex is given in the national annex. If the national annex contains no information on the application of this informative annex, it can be used.

G.2 Scope and field of application

(1) This informative annex covers non-classified details as similar as possible to reference details, which satisfy the requirements of Tables 10.1 to 10.11 and Table B.2.

NOTE Further guidance on the application of this method can be found in ref. [1].

(2) This informative annex applies for fatigue verification that is carried out according to the provisions given in Clause 9 and in Annex A.

G.3 Fatigue action effect

(1) Fatigue action effect should be calculated in accordance with B.3.

G.4 Fatigue resistance

(1) The calculation procedure for the determination of the fatigue resistance should be as follows:

a) Select a reference detail with known fatigue resistance from the detail category tables, which is as similar as possible to the detail to be verified with respect to geometric, weld quality and loading parameters;
b) Identify the type of stress in which the fatigue resistance is expressed. This is usually the nominal stress;
c) Establish a FEM model of the reference detail and the detail to be verified with the same type of meshing and elements following the recommendations given in EN 1993-1-14;
d) Use the reference detail and the detail to be verified with the stress identified in b);
e) Determine the hot spot stress ranges $\Delta\sigma_{\mathrm{HS,ref}}$ of the reference detail and the hot spot stress ranges $\Delta\sigma_{\mathrm{HS,nc}}$ of the non-classified detail to be verified;
f) The detail category of the non-classified detail to be verified $\Delta\sigma_{\mathrm{HS,C,nc}}$ is determined from the detail category of the reference detail $\Delta\sigma_{\mathrm{HS,C,ref}}$ as follows:

$$\Delta\sigma_{\mathrm{HS,C,nc}} = \frac{\Delta\sigma_{\mathrm{HS,ref}}}{\Delta\sigma_{\mathrm{HS,nc}}}\Delta\sigma_{\mathrm{HS,C,ref}} \tag{G.1}$$

(2) Where control measurements are taken to verify the calculated stresses on the non-classified detail or the reference detail, strain gauges should be positioned outside the heat affected zone.

G.5 Fatigue verification

(1) For the fatigue verification of the detail, the slope parameters m_1, m_2 and the number of cycles N_D of the reference detail may be assumed.

(2) For verification with respect to reference value, the normal stress ranges for a non-classified constructional detail should satisfy the following relationship:

$$\frac{\Delta\sigma_{\mathrm{HS,,e,2,Ed}}}{\Delta\sigma_{\mathrm{HS,C,nc}}/\gamma_{\mathrm{Mf}}} \leq 1{,}0 \qquad \text{(G.2)}$$

(3) When no data for $\Delta\sigma_{\mathrm{HS,e,2,Ed}}$ are available the verification format in Annex A may be used.

(4) An infinite life for constructional details may be assumed if the maximum stress range of the applied normal stress spectrum satisfies following relationship:

$$\frac{\Delta\sigma_{\mathrm{max,\,HS,Ed}}}{\Delta\sigma_{\mathrm{HS,D,nc}}/\gamma_{\mathrm{Mf}}} \leq 1{,}0 \qquad \text{(G.3)}$$

Bibliography

References contained in recommendations (i.e. "should" clauses)

The following documents are referred to in the text in such a way that some or all of their content constitutes highly recommended choices or course of action of this document. Subject to national regulation and/or any relevant contractual provisions, alternative documents could be used/adopted where technically justified. For dated references, only the edition cited applies. For undated references, the latest edition of the referenced document (including any amendments) applies.

[1] EN 10163-2, *Delivery requirements for surface condition of hot-rolled steel plates, wide flats and sections - Part 2: Plate and wide flats*;

[2] EN 10163-3, *Delivery requirements for surface condition of hot-rolled steel plates, wide flats and sections - Part 3: Sections*;

[3] EN 10210, *Hot finished steel structural hollow sections*;

[4] EN 10219, *Cold formed welded structural hollow sections of non-alloy and fine grain steels*;

[5] EN ISO 2553, *Welding and allied processes — Symbolic representation on drawings — Welded joints*;

[6] EN ISO 5817, *Welding — Fusion-welded joints in steel, nickel, titanium and their alloys (beam welding excluded) — Quality levels for imperfections*;

[7] EN ISO 6947, *Welding and allied processes — Welding positions*;

[8] EN ISO 9013, *Thermal cutting — Classification of thermal cuts — Geometrical product specification and quality tolerances*;

[9] ISO 14347, *Fatigue – Design procedure for welded hollow section joints – recommendations*.

References contained in possibilities (i.e. "can" clauses) and notes

The following documents are cited informatively in the document, for example in "can" clauses and in notes.

[1] Hobbacher, A.F.: Recommendations for Fatigue Design of Welded Joints and Components Second Edition, IIW document IIW-2259-15, 2016.

[2] Kuhlmann, U., Breunig, S., Ummenhofer, T., Weidner, P.: Entwicklung einer DASt-Richtlinie für höherfrequente Hämmerverfahren, DASt-AiF-IGF-Nr. 17886, Final report, 2017.

[3] Shams-Hakimi, P., Carlsson, F., Al-Emrani, M., Al-Karawi, H.: Assessment of in-service stresses in steel bridges for high-frequency mechanical impact applications, Engineering Structures, Elsevier, Vol. 241, 112498, May 2021.

[4] Kuhlmann, U., Breunig, S., Gölz, L.: Untersuchungen zur Auswirkung variierender Ausführungsqualitäten einer HFH-Nachbehandlung und Beurteilung einfacher Methoden zur Überprüfung der Nachbehandlungsspur, Schlussbericht, BAW; http://www.baw.de/content/publikationen/www-dokumente-oeffentlich/0/2019_01_30_Schlussbericht_Final.pdf.

[5] VDI 2230-1: Systematic calculation of highly stressed bolted joints – Joints with one cylindrical bolt; Verlag des Vereins Deutscher Ingenieure, 2015.

[6] EN 1994, Design of Composite Steel and Concrete Structures.

[7] EN ISO 14732, Welding personnel – Qualification testing of welding operators and weld setters for mechanized and automatic welding of metallic materials.

[8] CEN/TR 14599:2005: Terms and definitions for welding purposes in relation with EN 1792, CEN, June 2005.

[9] DASt Richtlinie 026, Ermüdungsbemessung bei Anwendung höherfrequenter Hämmerverfahren, Stahlbau Verlag, 2019, ISBN 978-3-941687-37-0.

[10] Marquis, G. B., and Barsoum, Z: IIW Recommendations for the HFMI Treatment: For Improving the Fatigue Strength of Welded Joints. IIW Collection, Springer Publishers, 2016, ISBN 978-981-10-2503-7.